GX4000i Series
Thermal Label Printer
User Manual



User Manual: GX4000i Series
Version : B.6
Issue Date : 2025/05/09
P/N : 920-018411-00

Content

1 Thermal Label Printer 5

1.1 Box Content 5

1.2 Getting to Know Your Printer 6

2 Printer Setup 8

2.1 Loading the label roll 8

2.2 Loading & Removing the Ribbon 12

2.3 Connecting the printer to the host computer 14

2.4 Installing Printer Driver and GoLabel 15

3 Printer Setting and Control 20

3.1 Operation Panel 20

3.2 LCD Interface Introduction 21

3.3 LCD Interface Funcion 26

3.4 Label Calibration and Self Test 32

3.5 Error Alerts 34

3.6 USB Host 37

4 NetSetting for Ethernet 39

4.1 Installing the NetSetting software 39

4.2 The Interface of NetSetting 40

5 Accessories 47

5.1 Preparation Steps 47

5.2 Installing the Cutter 48

5.3 Installing the High-Speed Cutter 52

5.4 Installing the Paper Card Cutter 57

5.5 Installing the Perforation Cutter 60

5.6 Installing the Internal Rewinder Module 63

5.7 Installing the WiFi/BT Combo Module 67

6 Maintenance and Adjustment 69

6.1 Installing / removing the print head module 69

6.2 Adjusting the print line 70

6.3 Adjusting ribbon tension 71

6.4 Cleaning the thermal print head 72

6.5 Adjusting the balance and print head tension 73

6.6 Ribbon shield settings 74

6.7 Cutter Jam 75

6.8 Troubleshooting 76

APPENDIX—SPECIFICATIONS 77

APPENDIX—Communication Port Specifications 79

APPENDIX—WiFi quick Setting 80

GX4200i Series

FCC COMPLIANCE STATEMENT
FOR AMERICAN USERS

Federal Communication Commission Interference Statement

This equipment has been tested and found to comply with the limits for a Class B digital device, pursuant to Part 15 of the FCC Rules. These limits are designed to provide reasonable protection against harmful interference in a residential installation. This equipment generates, uses and can radiate radio frequency energy and, if not installed and used in accordance with the instructions, may cause harmful interference to radio communications. However, there is no guarantee that interference will not occur in a particular installation. If this equipment does cause harmful interference to radio or television reception, which can be determined by turning the equipment off and on, the user is encouraged to try to correct the interference by one of the following measures:

- Reorient or relocate the receiving antenna.
- Increase the separation between the equipment and receiver.
- Connect the equipment into an outlet on a circuit different from that to which the receiver is connected.
- Consult the dealer or an experienced radio/TV technician for help.

This device complies with Part 15 of the FCC Rules. Operation is subject to the following two conditions:
(1) This device may not cause harmful interference, and (2) this device must accept any interference received, including interference that may cause undesired operation.

FCC Caution: Any changes or modifications not expressly approved by the party responsible for compliance could void the user's authority to operate this equipment.

TO WHICH THIS DECLARATION RELATES

IS IN CONFORMITY WITH THE FOLLOWING STANDARDS
FCC CFR Title 47 Part 15 Subpart B:2013 Class B,CISPR 22:2008 ANSI C63.4: 2009
ICES-003 Issue 5:2013 Class B EN55022:2010+AC:2011,Class B EN61000-3-2 : 2006+A2: 2009
EN61000-3-3:2013 AS/NZS CISPR 22: 2009+A1:2010 EN 55024: 2010
IEC61000-4-2 Ed. 2.0: 2008 IEC 61000-4-3 Ed. 3.2: 2010 IEC 61000-4-4 Ed.3.0:2012
IEC 61000-4-5 Ed.2.0:2005 IEC 61000-4-6 Ed.4.0:2013 IEC 61000-4-8 Ed.2.0:2009
IEC 61000-4-11 Ed.2.0:2004
IEC 62368-1:2014

SAFETY INSTRUCTIONS

Please read the following instructions carefully.

1. Keep the equipment away from humidity.
2. Before you connect the equipment to the power outlet, please check the voltage of the power source.
3. Make sure the printer is off before plugging the power connector into the power jack.
4. It is recommended that you connect the printer to a surge protector to prevent possible transient overvoltage damage.
5. Be careful not to get liquid on the equipment to avoid electrical shock.
6. For safety and warranty reasons, ONLY qualified service personnel should open the equipment.
7. This equipment is not suitable for use in locations where children are likely to be present.
8. Do not repair or adjust energized equipment under any circumstances.

Caution

* Danger of explosion if battery is incorrectly replaced. Replace only with the equivalent type recommended by the manufacturer.
* Dispose of used batteries according to the manufacturer's instructions.
* Only use with designated power supply adapter model.
* Changes or modifications not expressly approved by the party responsible for compliance could void the user's authority to operate the equipment.
* Specifications are subject to change without notice.

1 Thermal Label Printer

1.1 Box Content

Please check that all of the following items are included with your printer.

※Package content and Logo style may vary per region.

•Thermal Label Printer

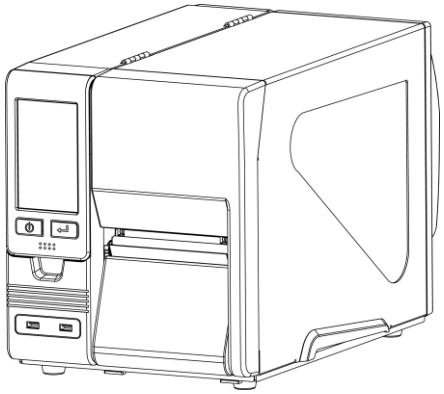

•Label Stock

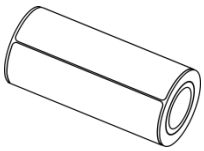

•USB Cable

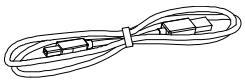

•Quick Guide



•Ribbon

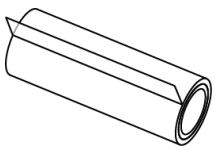

•Power Cord-US

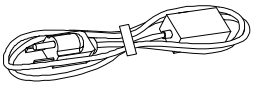

•Power Cord-EU



1.2 Getting to Know Your Printer

- Front View

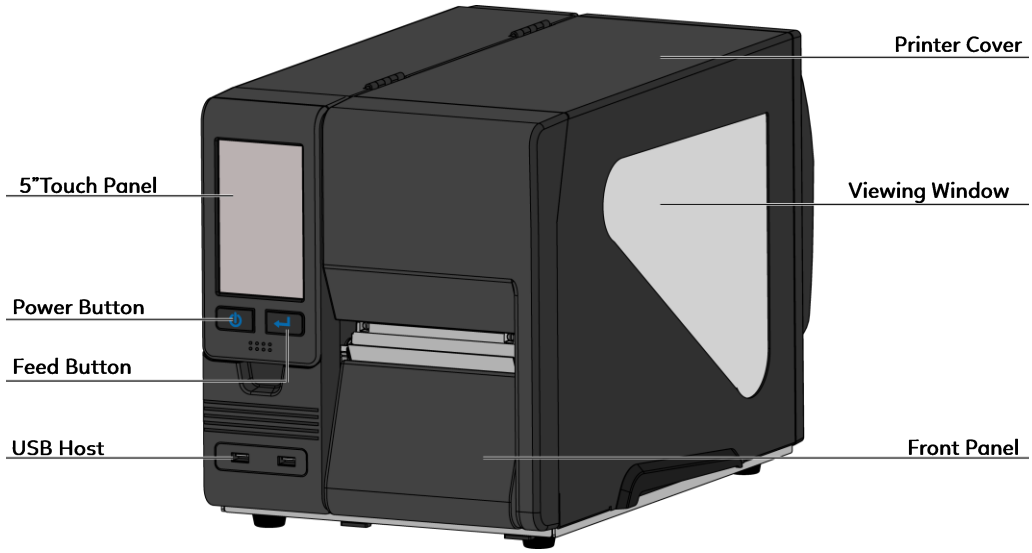

- Rear View

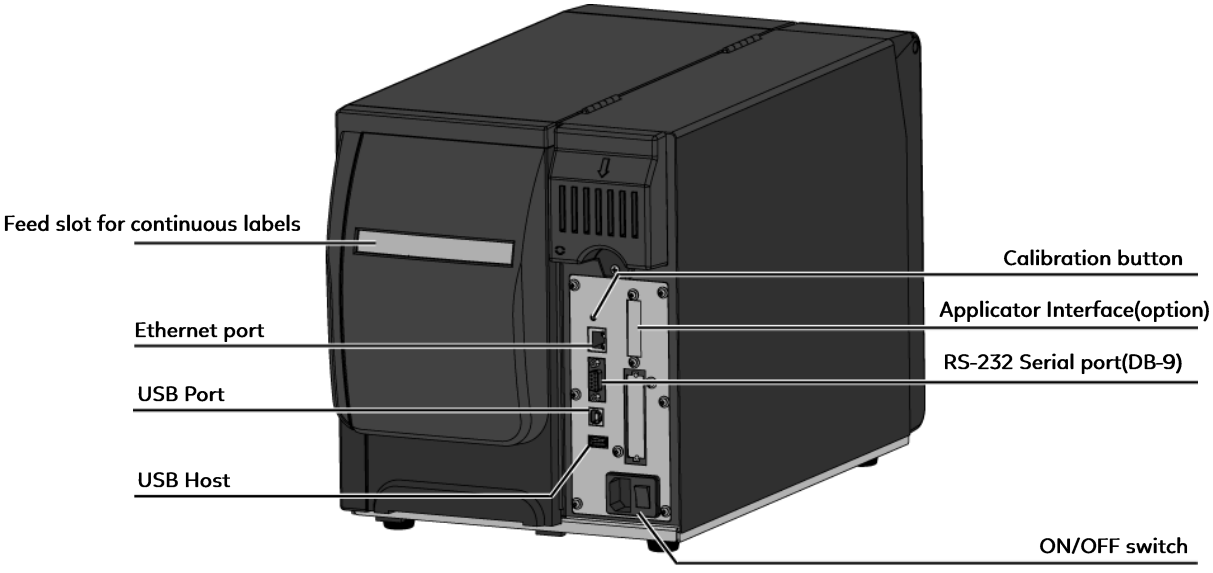

•Internal view of printer

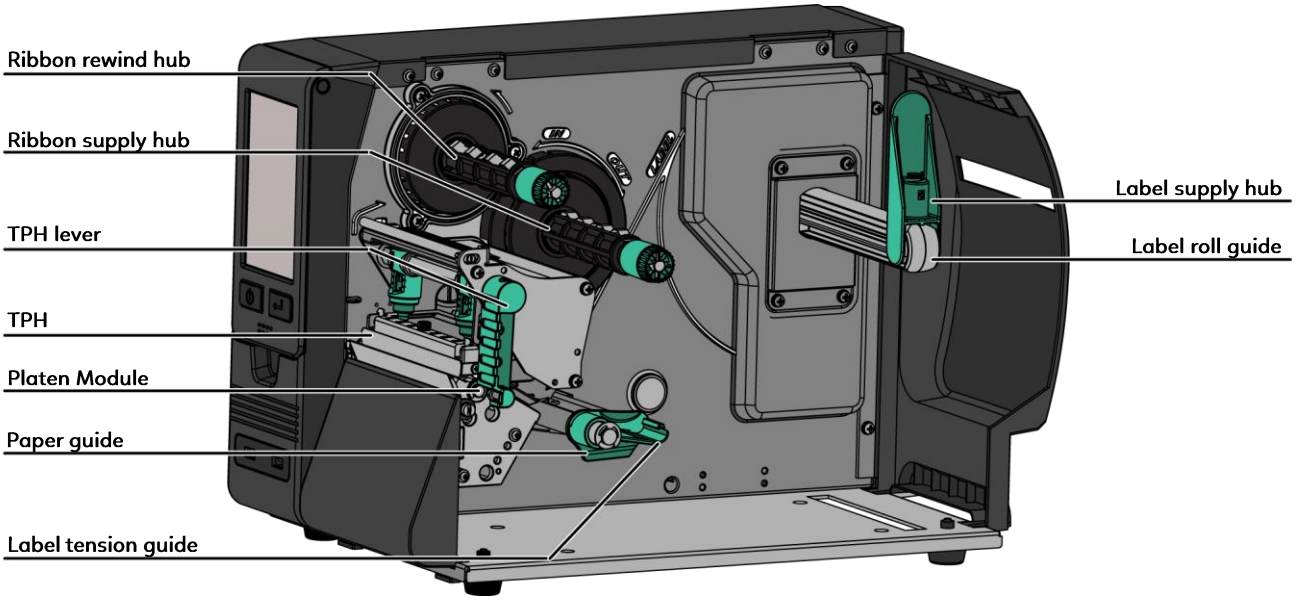

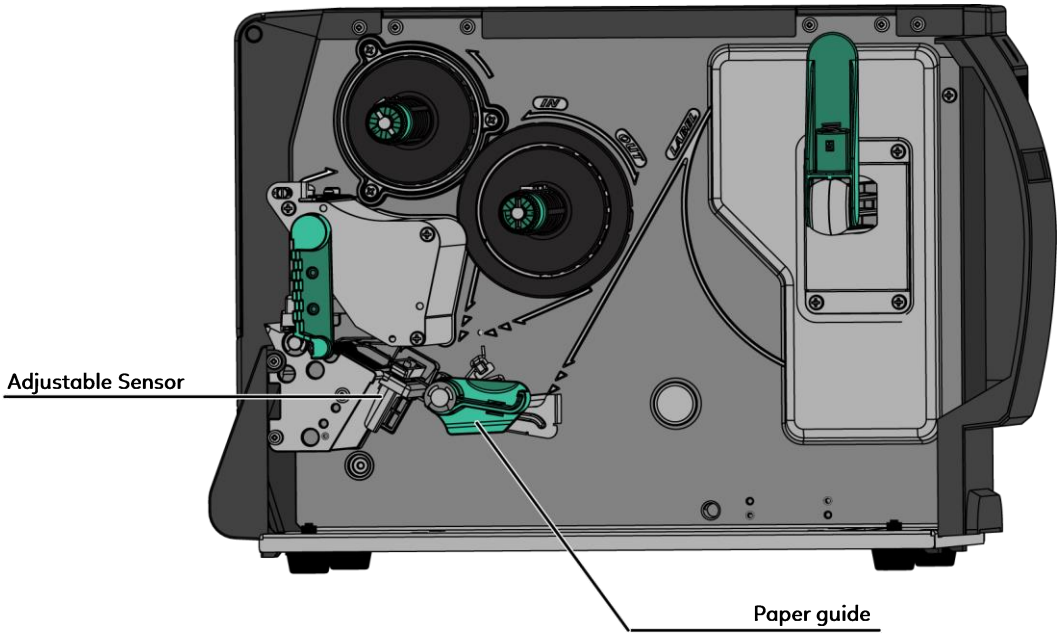

2 Printer Setup

2.1 Loading the label roll

This printer supports the following printering methods:

Thermal transfer printing (TTP)：Requires a ribbon for transferring a printed image to a medium.

Direct thermal printing (DTP)：Does not require a ribbon, only thermal paper.

Please check which printing method you are using and alter the settings accordingly in the printer driver, printer menu, and/or software.

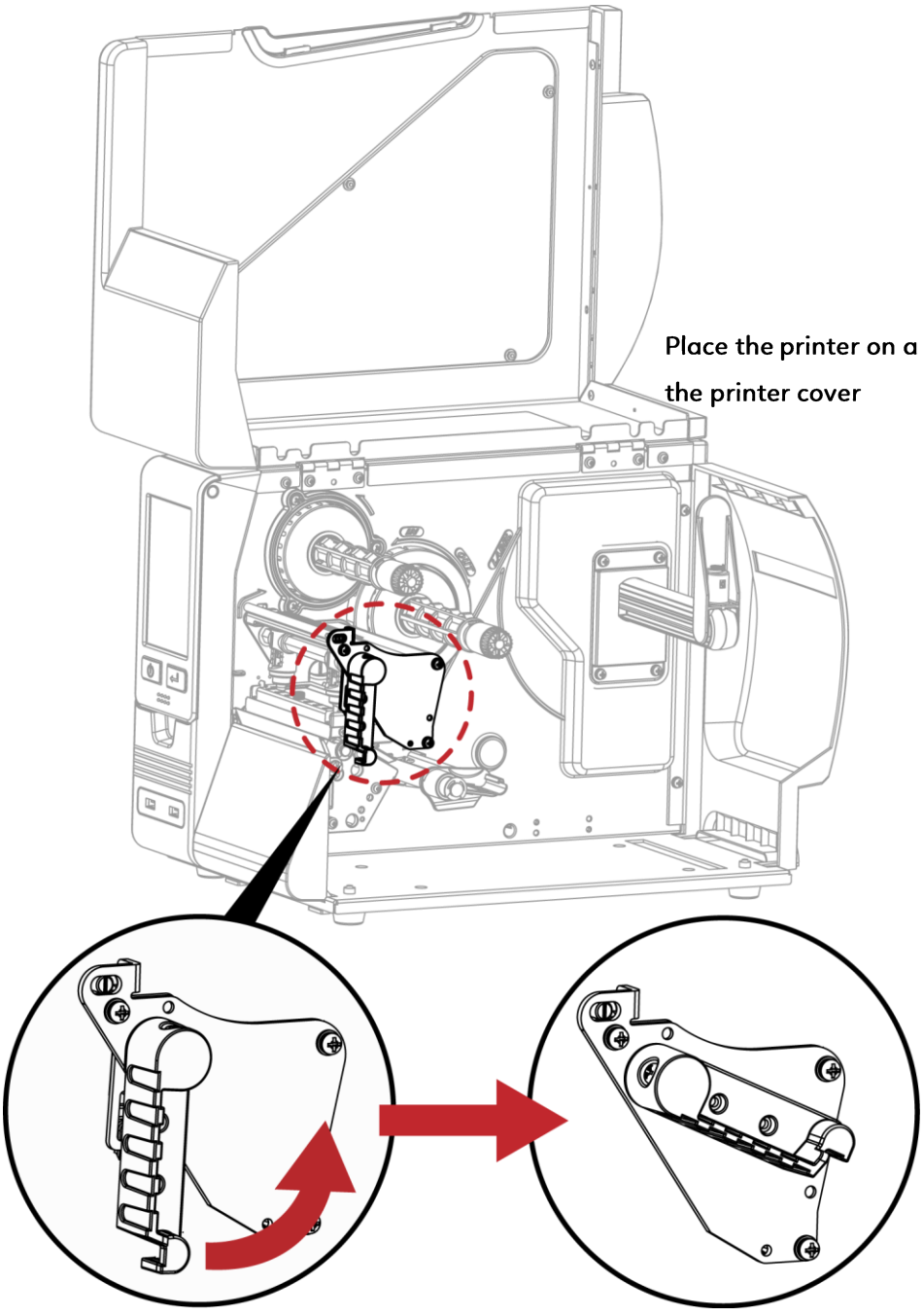

Place the printer on a flat surface and open the printer cover

Turn it anticlockwise to a top right position as shown in the illustration

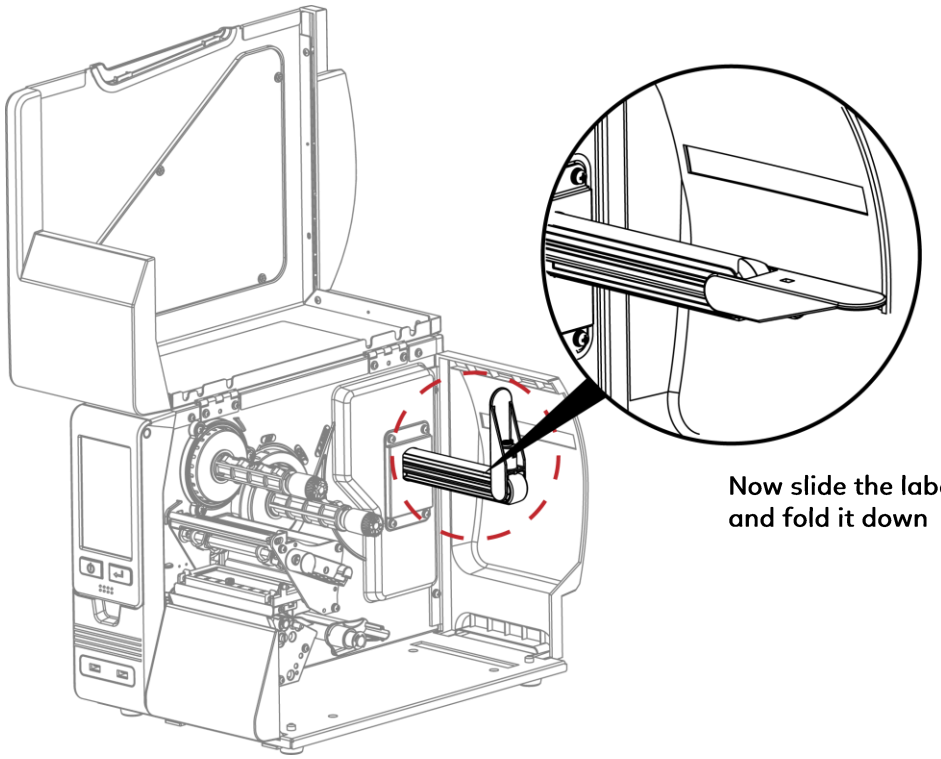

Now slide the label roll guide forward and fold it down

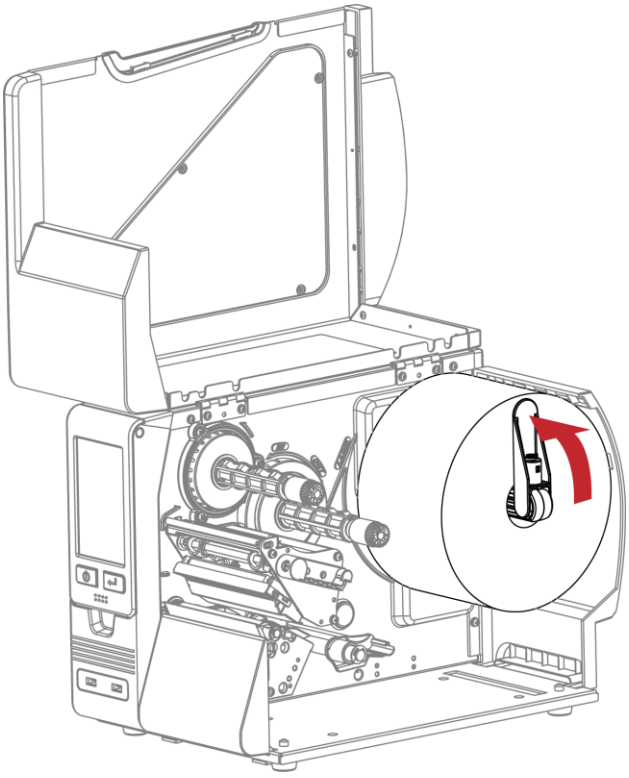

Place the label roll on the label supply hub , pushing it right up to the printer housing. (Do not apply too much pressure to avoid damaging the label stock.)

* When moving the label roll guide, hold it only by the end that is attached to the bracket, not by its top.

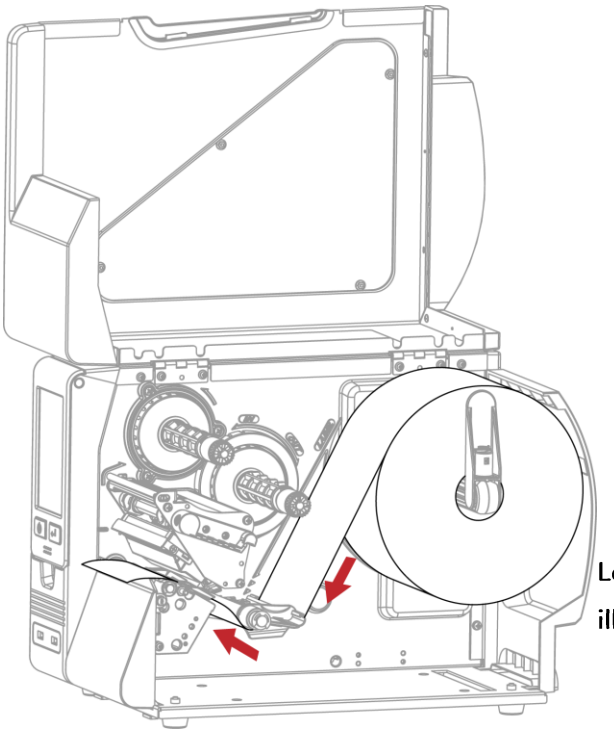

Load the label roll into the printer as shown in the illustration.

Pass the label stock through the Adjustable Sensor and up to the tear-off plate.

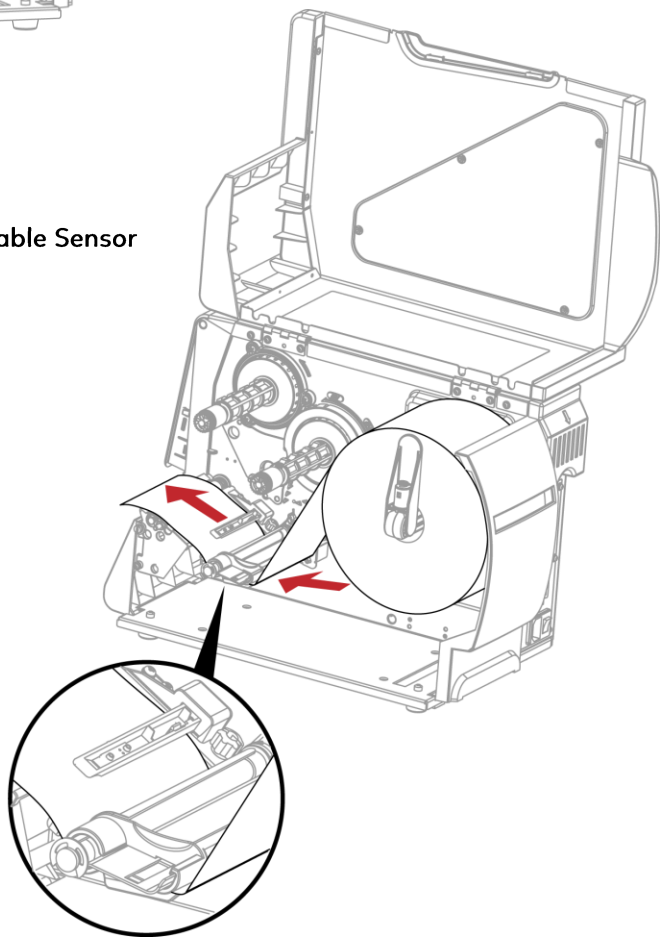

* Remember to set the movable sensor to gap, black mark, or tag hole by changing the position of the sensor with the adjustment wheel.

2. Return the print head release lever to its original position.

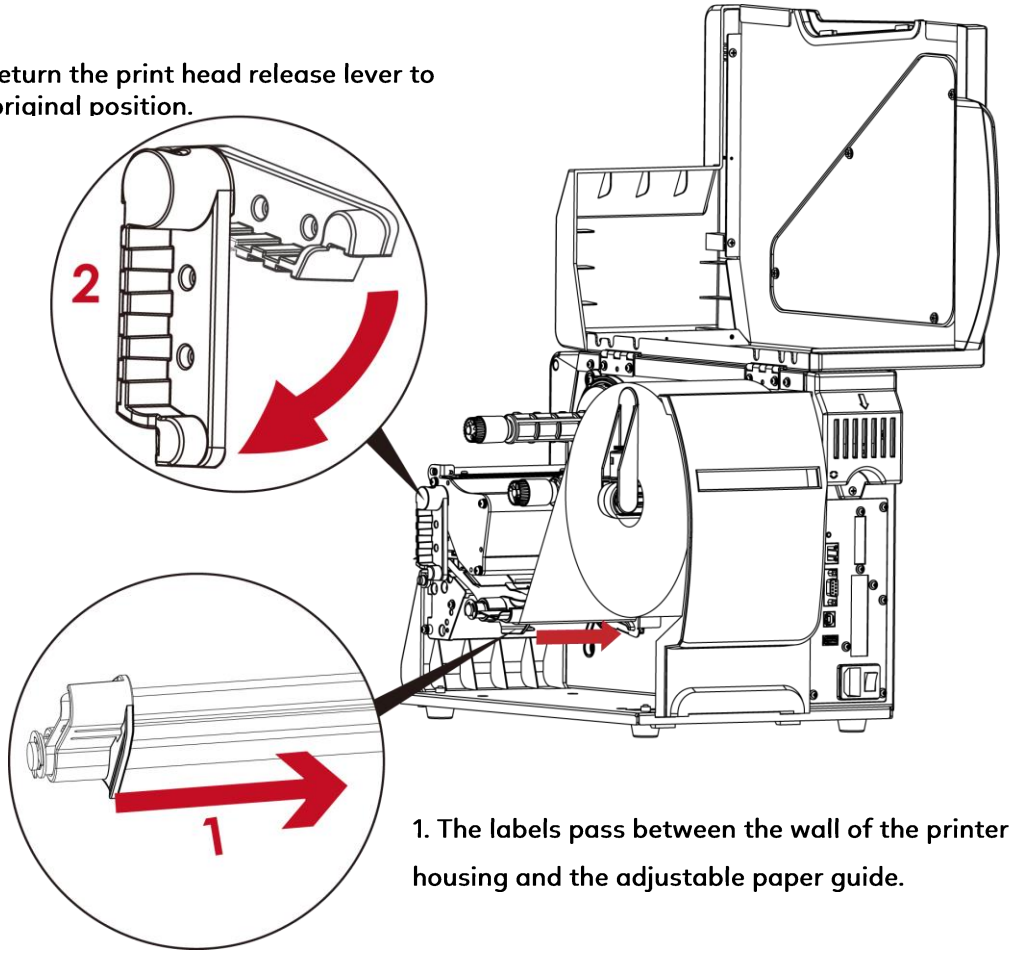

1. The labels pass between the wall of the printer housing and the adjustable paper guide.

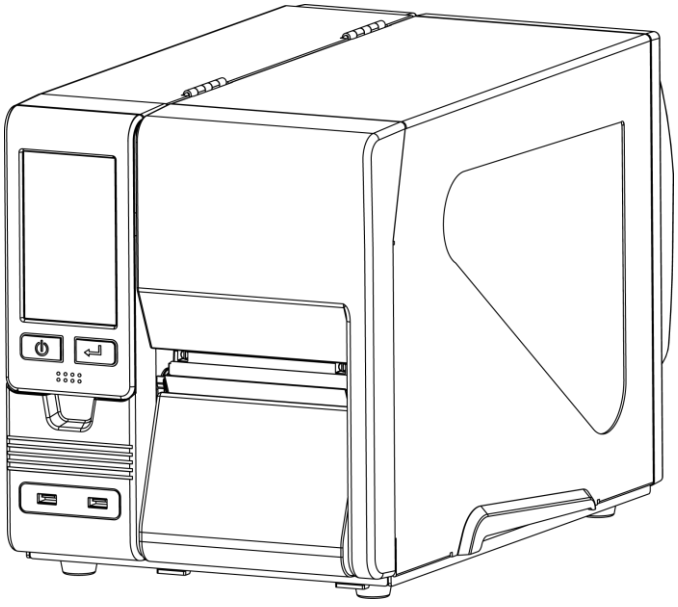

Then close the printer cover.

2.2 Loading & Removing the Ribbon

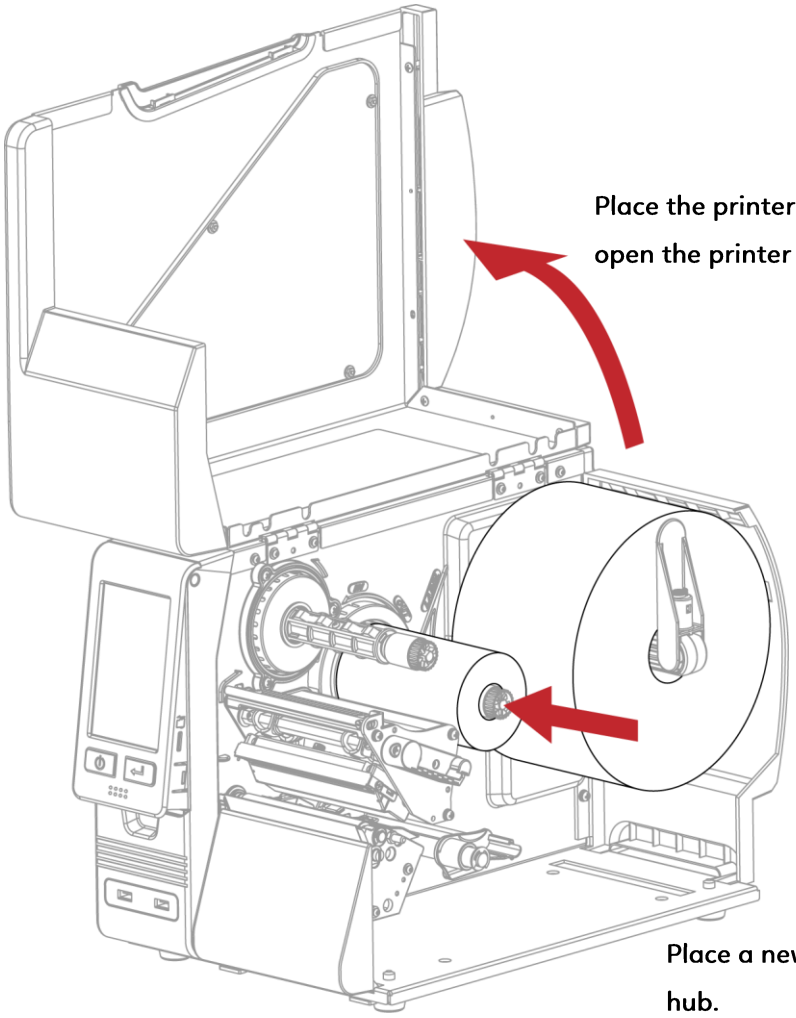

Place the printer on a flat surface and open the printer cover.

Place a new ribbon on the ribbon supply hub.

The two illustrations as below show you how to install the ribbon depending on the ribbon type (ink side in or out).

Ink side out

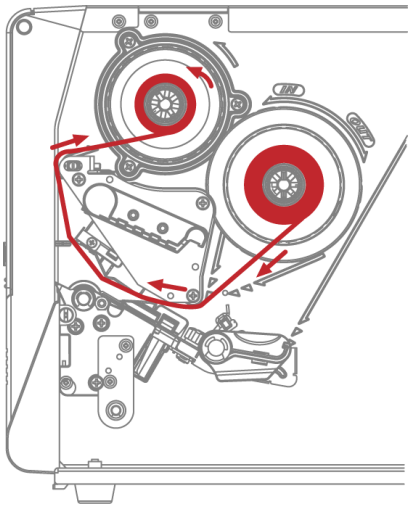

Ink side in

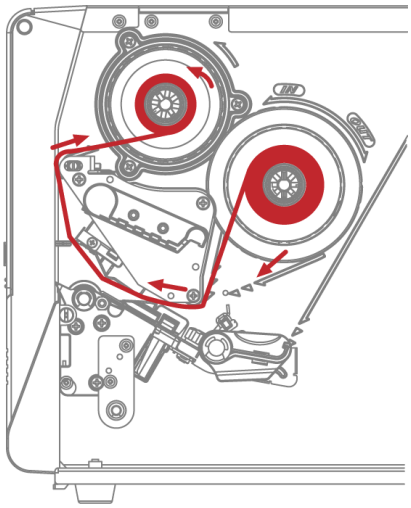

Pass the ribbon under the print head and back up on the other side.
Attach it to the empty ribbon core.

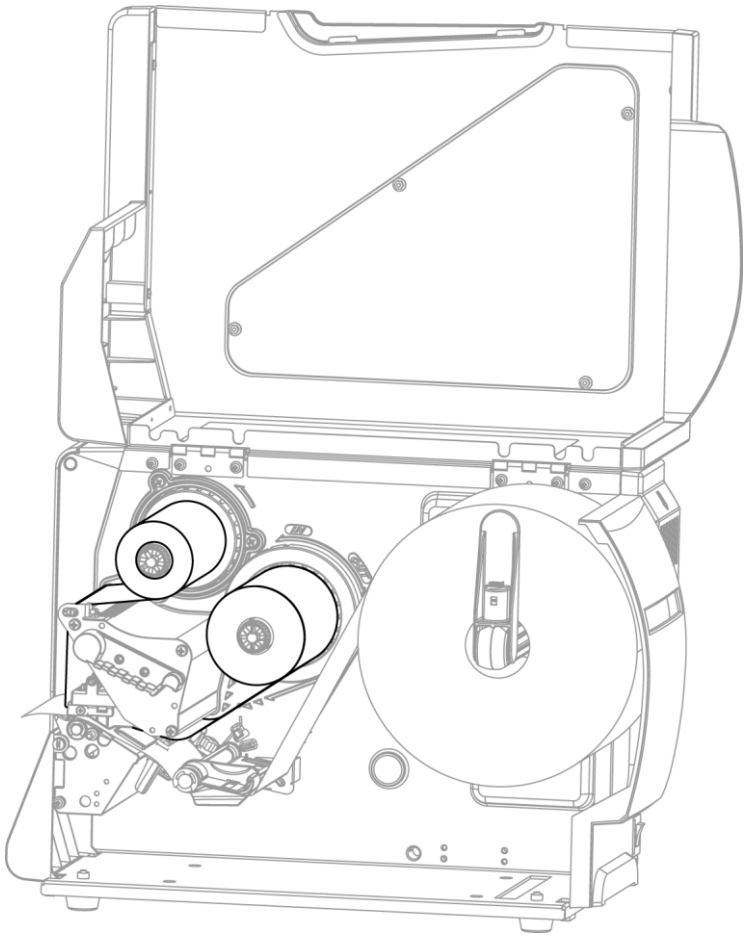

* Do not pass the ribbon under the sensor.

2.3 Connecting the printer to the host computer

1. Please make sure that the printer is switched off.
2. Connect the power cord to the AC adapter and connect the adapter to the printer.
3. Connect the USB cable to the printer and host computer.
4. Switch on the printer. The operator panel should now light up.

GX4000i Series

(The transmission interface depends on the model, the following is a schematic diagram)

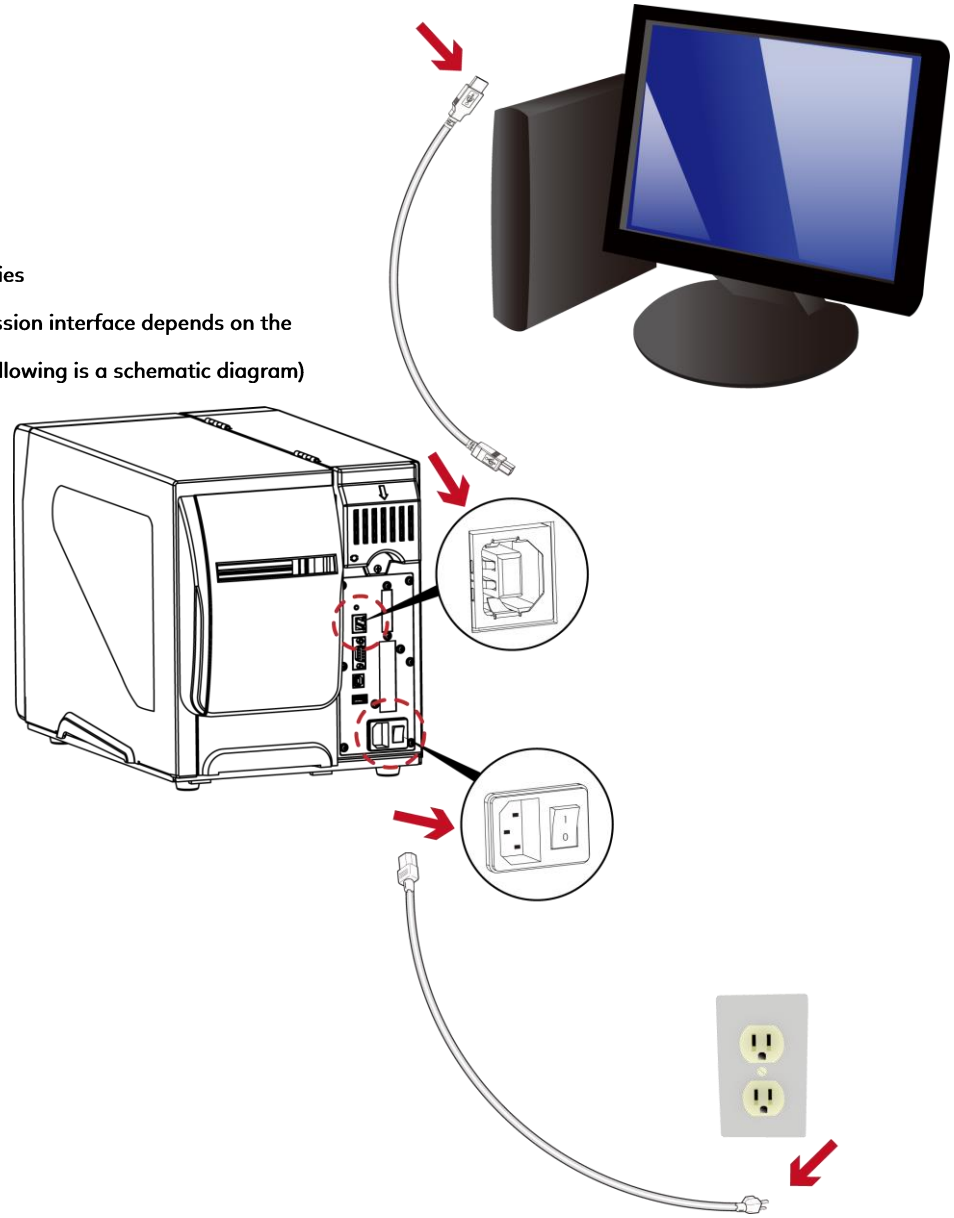

2.4 Installing Printer Driver and GoLabel

The driver and GoLabel can be downloaded from the official website (www.godexintl.com) or linked to the product download page via the QR Code on the Quick Guide

Driver

Step1. Follow the instructions on the screen. The Driver Wizard guides you through the installation procedure.

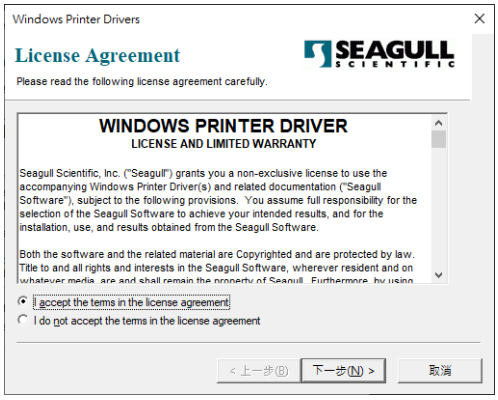

Step2. After selecting the path to decompress, click "Next"

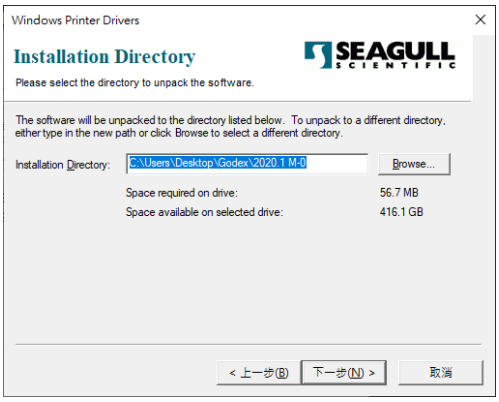

Step3. Click ”Finish”and open the Driver Wizard

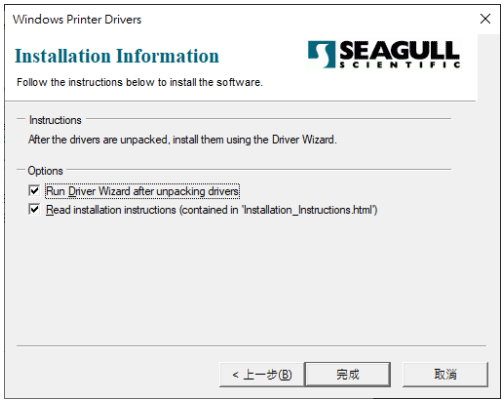

Step4. The driver installation wizard will automatically detect the model, please click "Next" to start the installation.

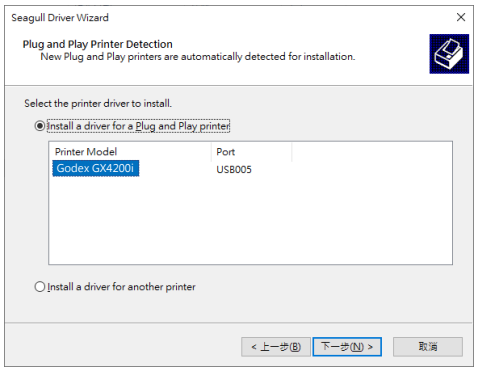

Step5. After entering the customized printer name, click "Next"

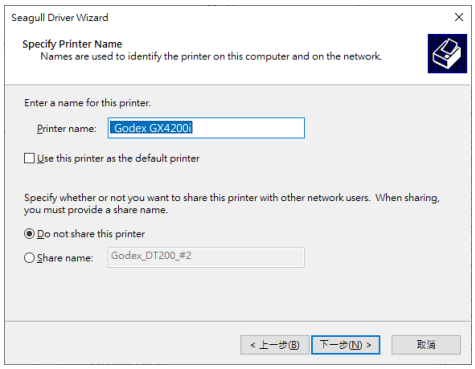

Step7. After confirming the settings, click "Finish" to install.

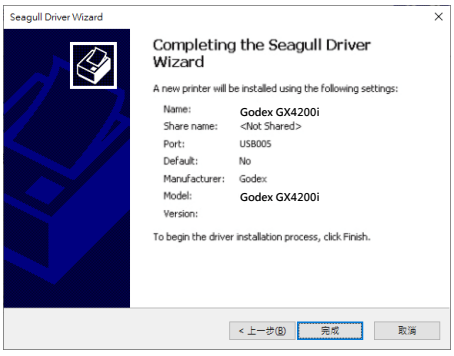

GoLabel—Label Design Software

Related documents and software can be downloaded from the official website.

1. Click the installer in the folder to install.

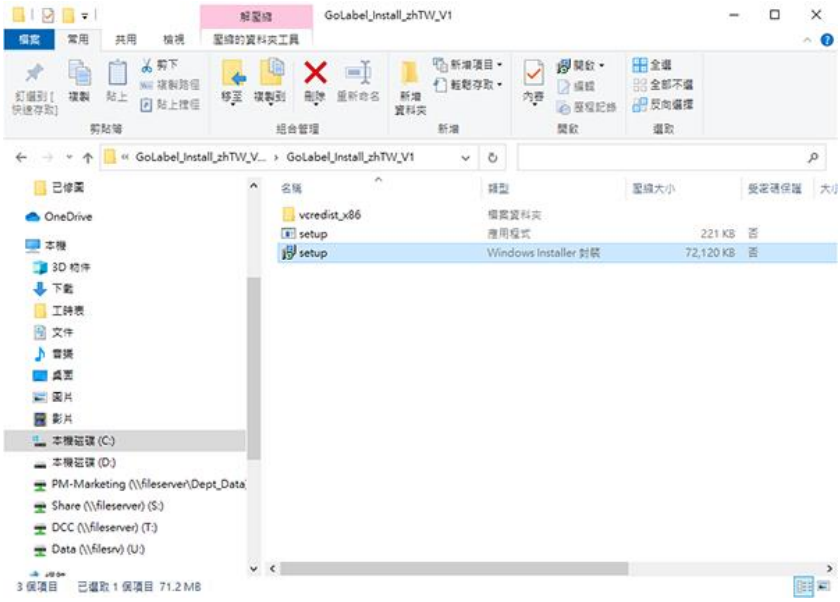

2. After entering the installation screen, click “Next”.

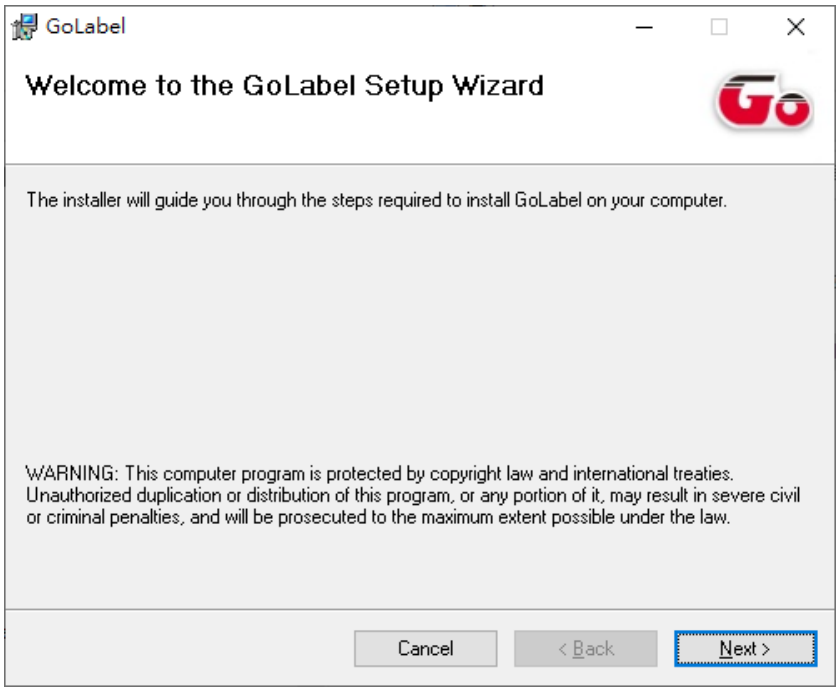

3. After selecting the folder to install, click “Next”

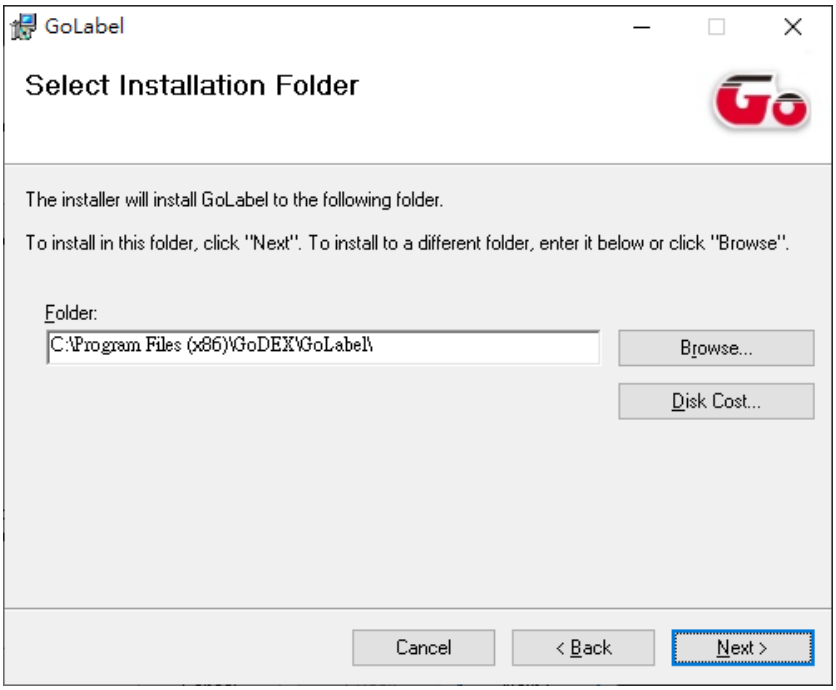

4. Click “Next” to start the installation.

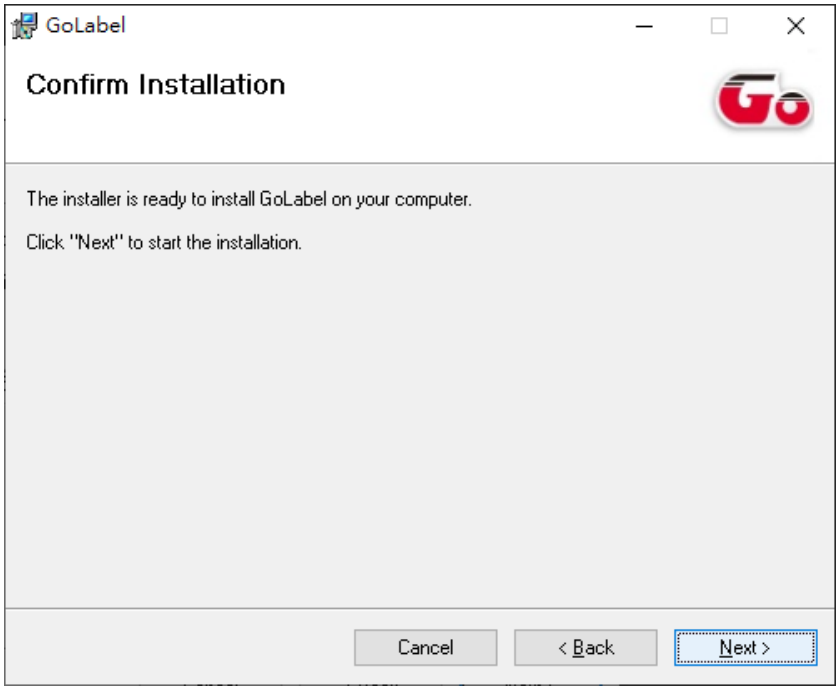

5.Finish installation.

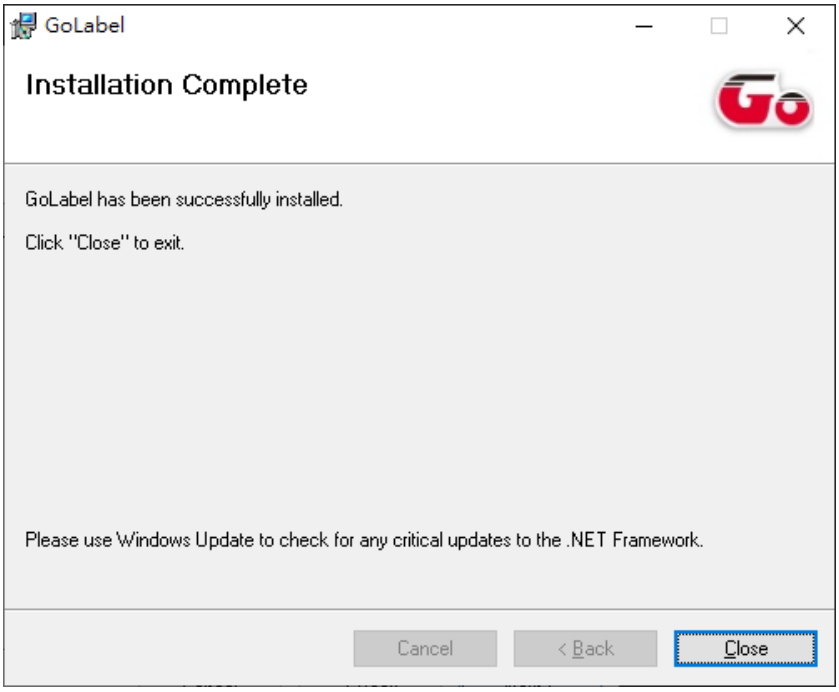

3 Printer Setting and Control

3.1 Operation Panel

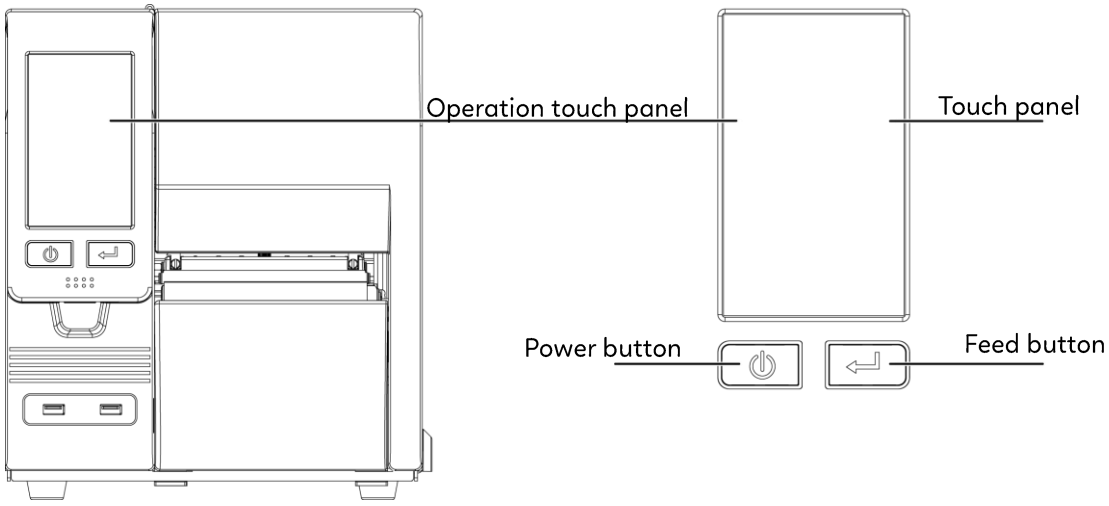

Power Button

Press the POWER button to turn on the printer, and the START UP SCREEN appears. The printer is on “ready to print” status, the LCD screen should display the message “READY“ on the screen.

When printer is turned on, hold and press down the POWER button for 3 second will turn the printer off.

FEED Button

Turn on the printer and press the FEED button.

When you press the FEED button, the printer will advance media until the FEED button is released.

If you are using continuous labels, pressing the FEED button will advance a length of media until the button is released.

If you are using media with gaps, pressing the FEED button once will advance only one label.

If the label does not stop at the correct position, you need to run the auto-detection function for your media,please see Section 3.4 Label Calibration and Self-Test.

PAUSE PRINTING_FEED Button

Pressing the FEED button while the printer is in standby mode will set the printer to pause mode. In this mode,the printer can receive commands, but it will only process them when it is reset to standby mode. Pressing the FEED button again will reset the printer to standby mode.

Pressing the FEED button during printing will interrupt printing. When the FEED button is pressed again, the printer resumes printing. Example: While a 10-label print job is running, you press the FEED button to pause the printer. Two of the labels have been printed. To resume printing and print the remaining eight labels, you will need to press the FEED button again.

CANCEL PRINTING_FEED Button

Press and hold the FEED button for 3 seconds during printing cancels a print job. The current print job is cancelled.

Example: While a 10-label print job is running, you press the FEED button. Two of the labels have been printed.

The print job is cancelled and the remaining eight labels will not be printed.

3.2 LCD Interface Introduction

Ready Status

Press the POWER button to turn on the printer, and the START UP SCREEN appears.

If the printer is on “ready to print” status, the LCD screen should display the message “Ready“ on the screen.

Use touch gestures to get around the Home screen and other screen for setting.

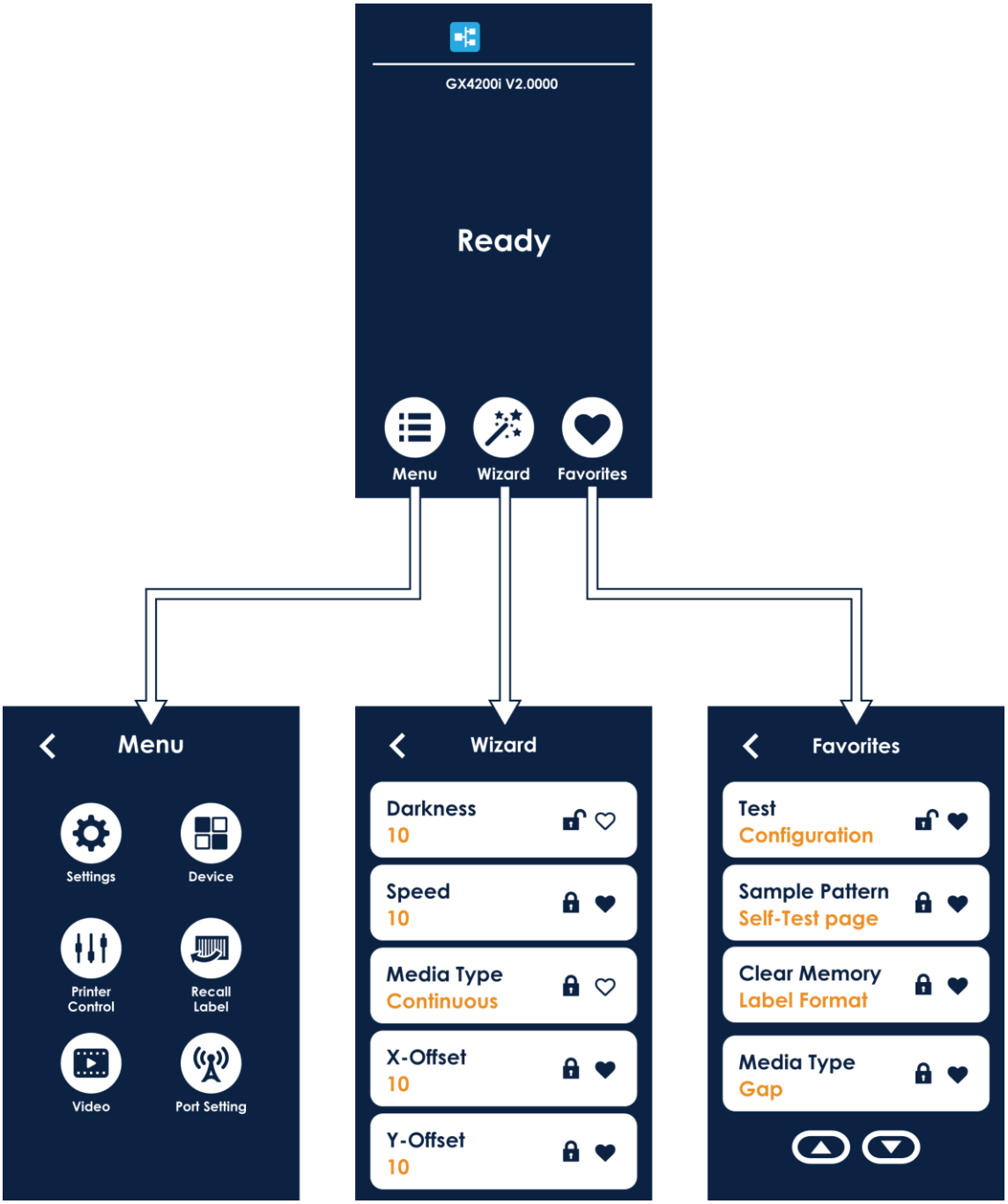

MENU

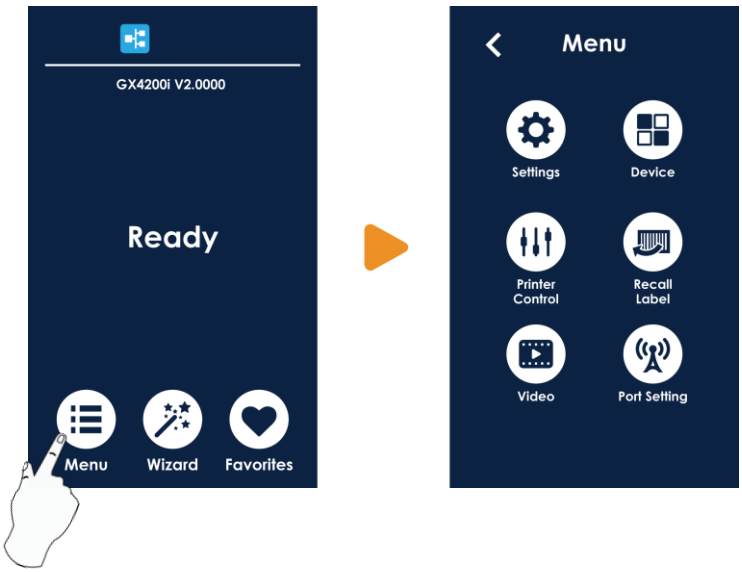

Tap ‘’Menu’’—

Screen could show more detail of’’ Main‘’.

Wizard

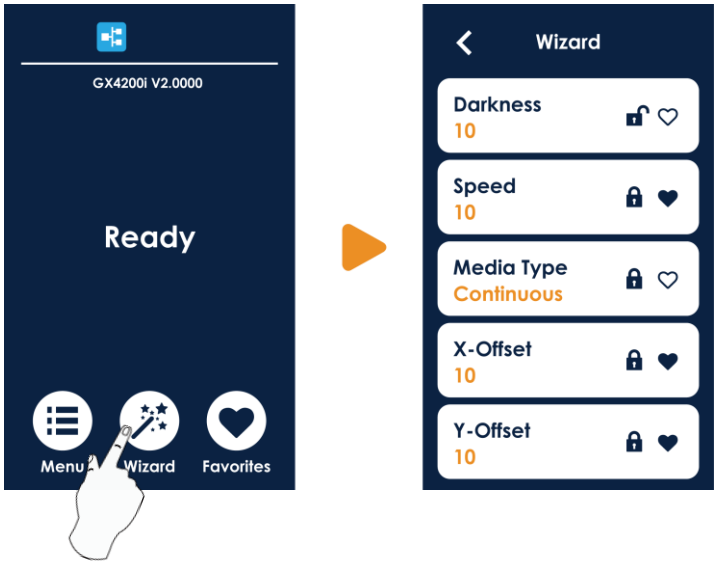

Tap ‘’Wizard ‘’—

Set up printer of ‘’Darkness’’ ‘’Speed ‘’...

Favorites

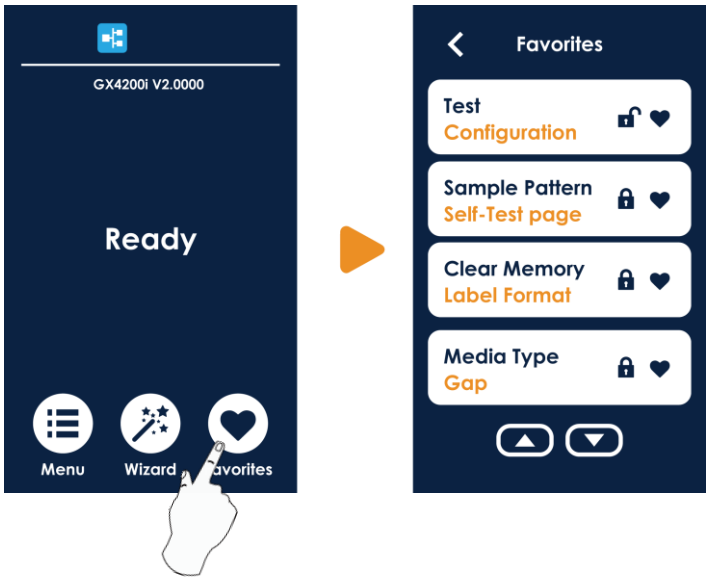

Click "Favorites"—

Enter the shortcut menu you set.

Setting Method

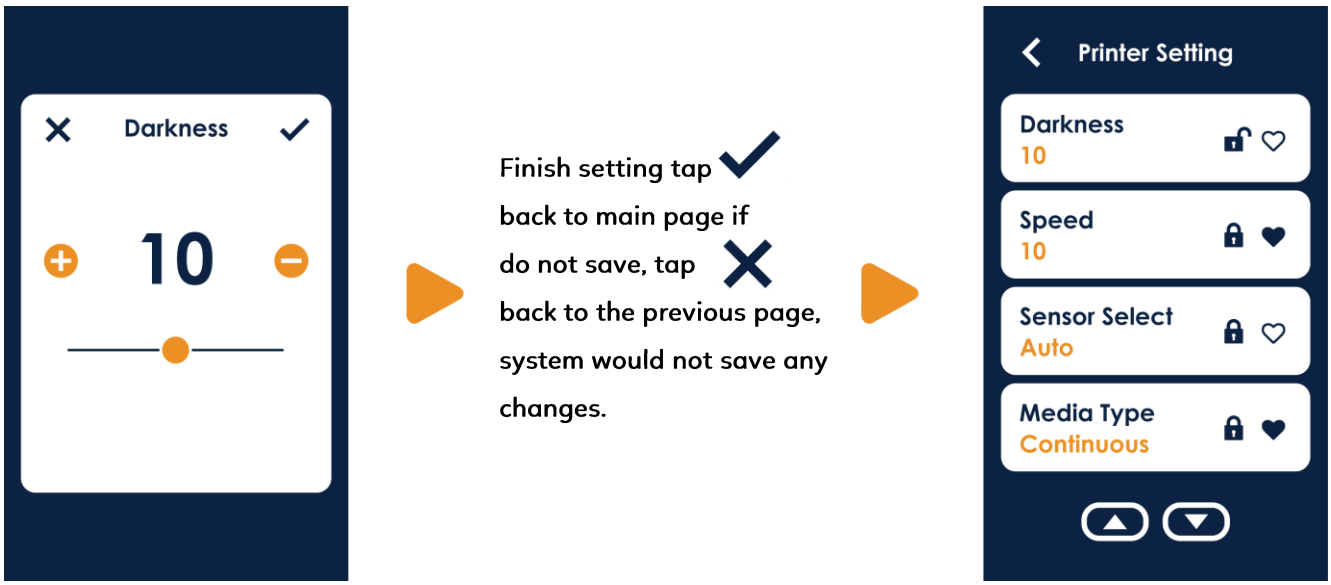

Shortcut function (Favorites)

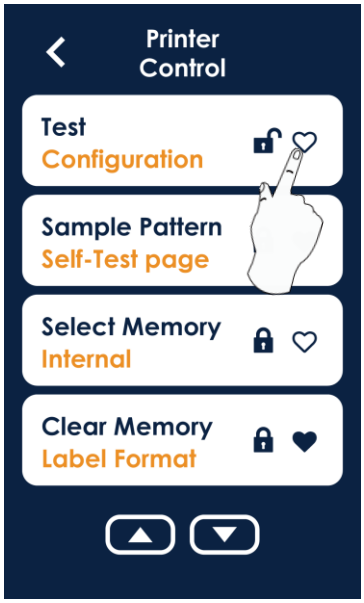

Cancel favorite setting

Set as favorite

After setting as a favorite, you can add a shortcut to the "favorite" page of the main screen.

Lock function





Unlock



Lock

When the function is locked, it cannot receive external commands (GoLabel)

Recall Label and Preview

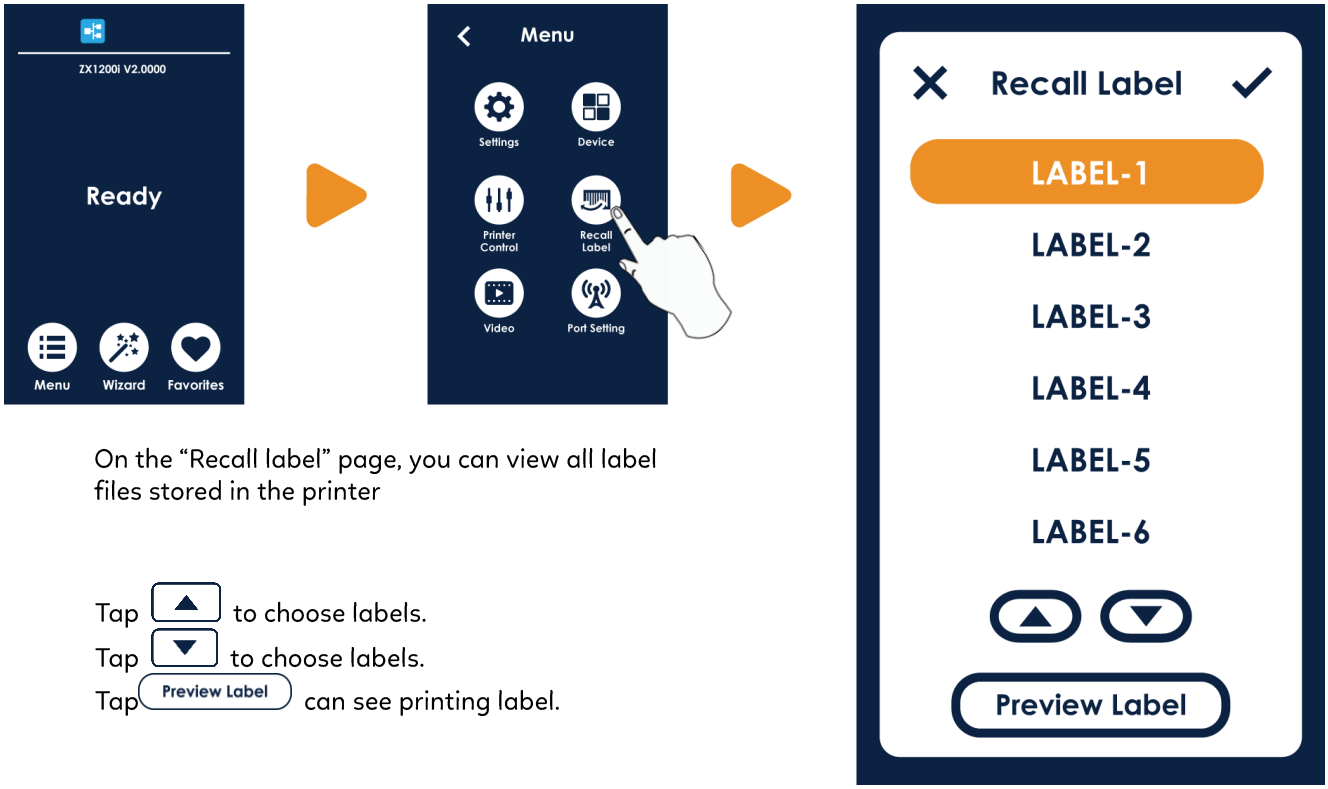

On the “Recall label” page, you can view all label files stored in the printer

Tap ▲ to choose labels.

Tap ▼ to choose labels.

Tap Preview Label can see printing label.

After confirming the label style and quantity,click ✓ to print the selected label.



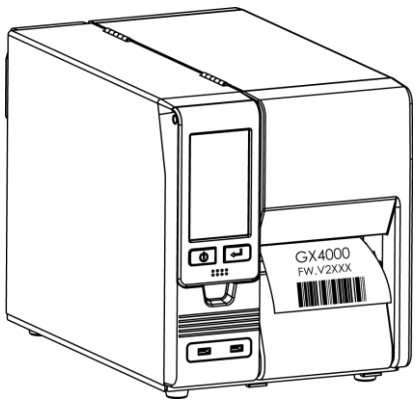

3.3 LCD Interface Funcion



Setting items for printer, ex. Printing speed, darkness.Also includes a Printing Wizard for your ease of printing.

Related peripheral device setting items, ex. cutter、dispenser

---

It can operate the special functions of the label printer, such as automatic calibration, self-test, clear memory, etc.

Recall Label

Video function, you can enter to watch the videos stored by the user.

Port settings, such as BT, WiFi... etc.

	Setting	Printer Setting	Darkness	0-19
			Speed	2-4
			Sensor Select	Auto Select
				See-Through
				Reflective
			Media Type	Continuous
				Label with Gaps
				Label with Marks
			Printing Mode	Direct Thermal
				Thermal Transfer
			Tear-Off Position	0-50
			Top of Form	Off
				Full
				TPH Open Only
				Back Up Only
			Code Page	850、852、437、860、863、865、857、861、862、855、866、737、851、869、Windows 1252、Windows 1250、Windows 1251、Windows 1253、Windows 1254、Windows 1255、Windows 1257、
			Selecy Memory	Internal
				External
			Printer Language	Auto
				EZPL
				GEPL
				GZPL
		Label Setting	Rotation	0°
				90°
				180°
				270°
			Horizontal Offset	-32~32
			Vertical Offset	-100~100
			Start Offset	-100~100
	Devices	Buzzer	Off	
			On	
		Option Settings	Option	None
				Cutter
				Label Dispenser
				Applicator
			Smart Backfeed	Off
				On

			Password	0000
		LCD Settings	LCD Language	English
				繁體中文
				简体中文
				Deutsch
				Français
				Español
				Italiano
				Polski
				Русский
				Türkçe
				にほんご
				한국어
			Video Volume	0-10
		Clock Settings	Display	Off
				On
			Date	YYYY/M/D
			Time	h/m
	Printer Comtrol	Test	Configuration	
			Directory	
			TPH Testing	
			Dump Mode	
		Sample Pattern	Self-Test page	
			Balance	
		Clear Memory	Label Format	
			Graphic	
			Bitmap Fonts	
			True Type Fonts	
			Asian Fonts	
			All	
		Calibration	Y/N	
		Reset to Default	Y/N	
		Printer Info	Y/N	
	Port Settings	RS232 Settings	Baud Rate	4800
				9600
				19200
				38400
				57600
				115200
			Parity	None
				Odd

				Even
			Data Bits	7
				8
			Stop Bits	1
				2
		LAN Settings	DHCP	Off
				On
			IPAddress	
			Subnet Mask	
			Gateway	
			Port No.	
		BT Settings		
		Wi-Fi Settings		
	Recall Label	Preview Label	Print Quantity	
	Video	Play	Replay	
			Exit	

Status of LCD Interface

When printer is on standby status (ready to print), the LCD interface will display “Ready” on screen.

You can only print when you see the “Ready“ status.

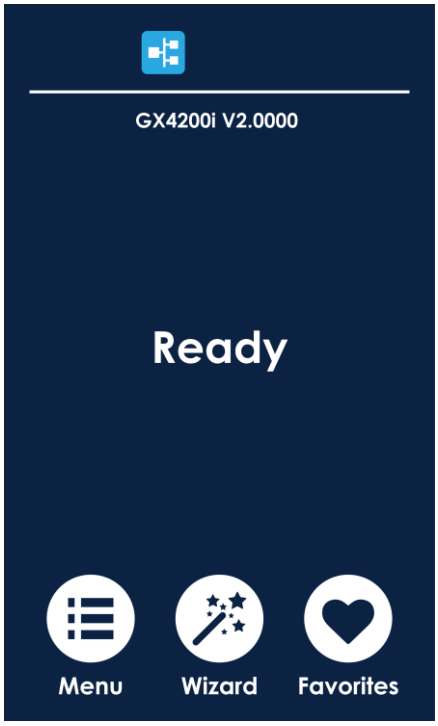

If there is any printers error, the LCD screen will display the error screen to show the type of error.

You can fix the error according the notice.

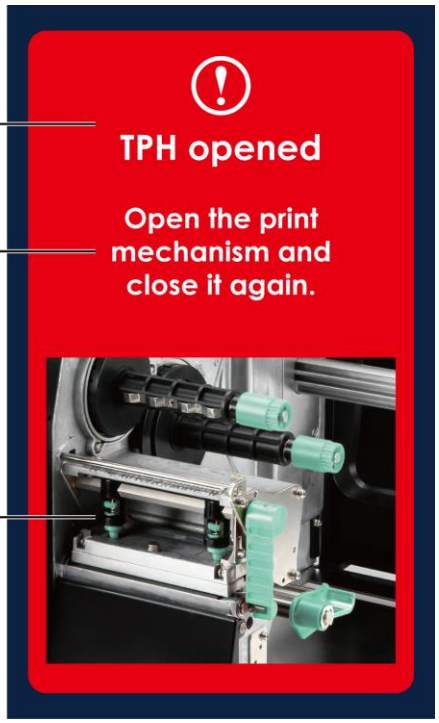

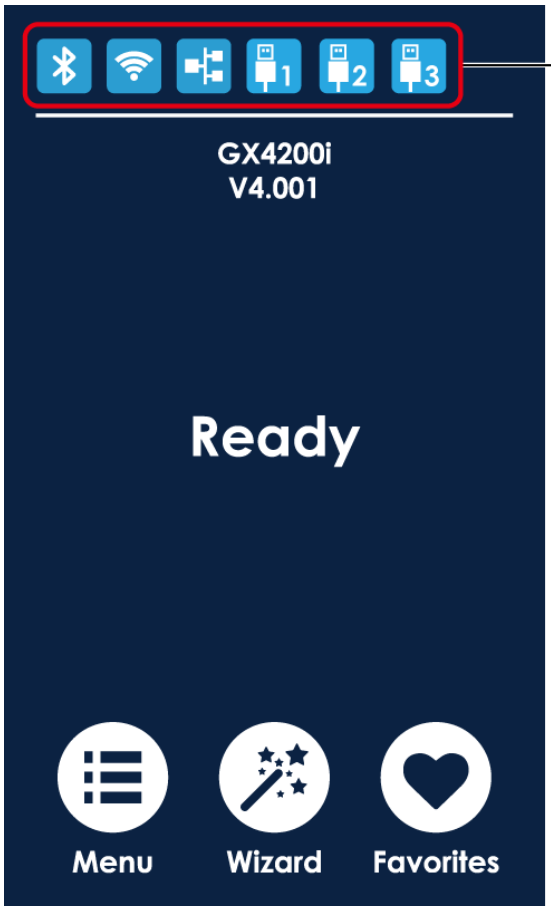

Connection status indicator: When the device is connected to the printer, the corresponding blue icon will light up, indicates the connection is successful.

BT

WiFi

Ethernet

USB Host 1 : behind the printer

USB Host 2 : On the left side of control panel

USB Host 3 : On the right side of control panel

3.4 Label Calibration and Self Test

Label Calibration

The printer can automatically detect and store label height.

That means the host computer does not need to transmit the label height to the printer.

Self Test

Self-test function lets you check whether the printer is functioning normally.

Here is how you run the label size calibration and self test.

1. Check that the label stock is loaded correctly.
2. Turn off the printer.
3. Turn the printer on again,keeping the FEED button pressed. When the LED starts to flash red, release the FEED button. The printer will now measure the label stock and store the label height.
4. Once the printer has successfully measured the label stock, it will print a self-test label.

The contents of a self-test printout are listed below：

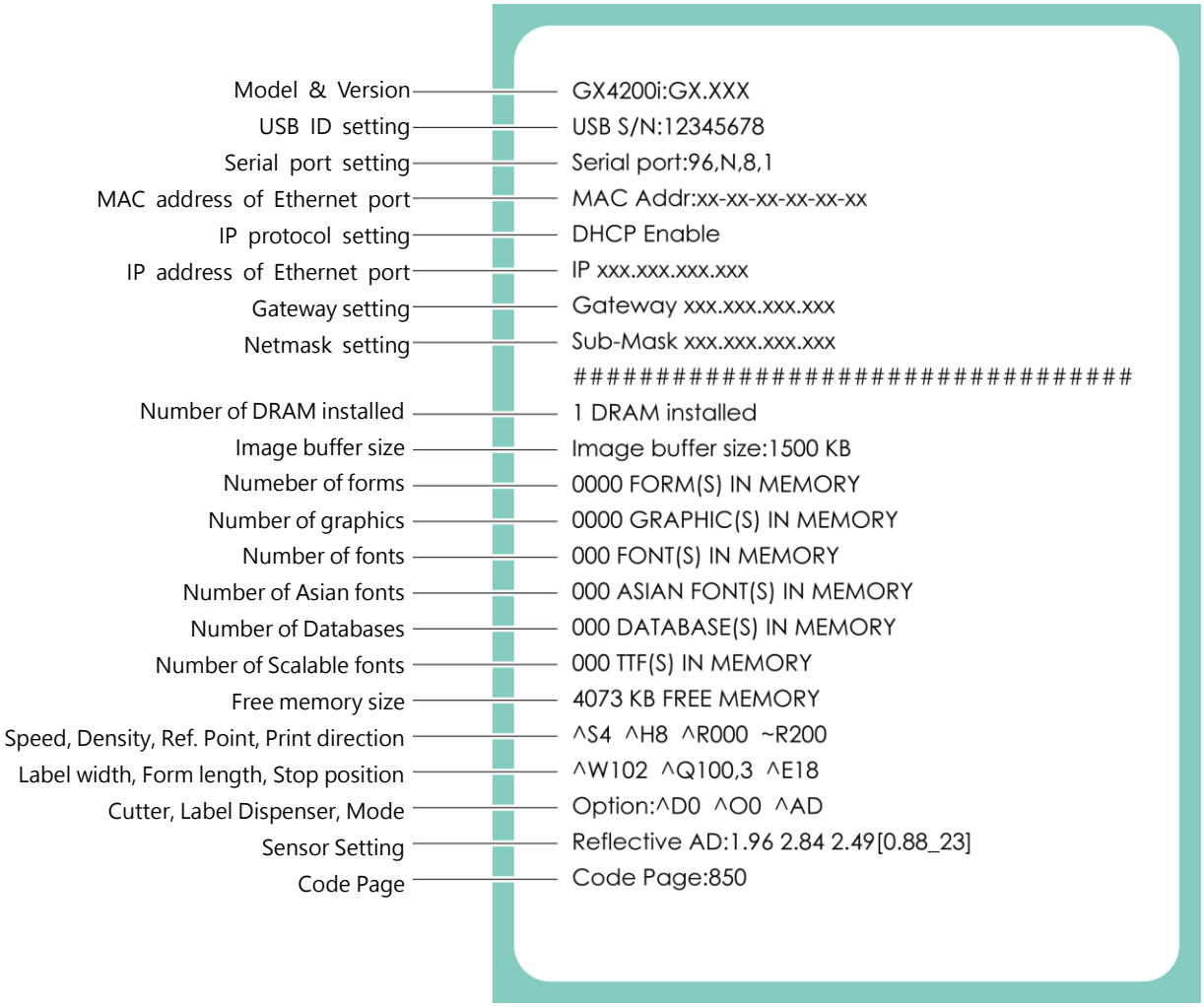

Label Calibration Button

A hardware button to make a Label Calibration while printer encountering "Media Error" during the cases when first-time printer start up or change label or ribbon to another type, such as change using gap label to continuous or black mark labels.

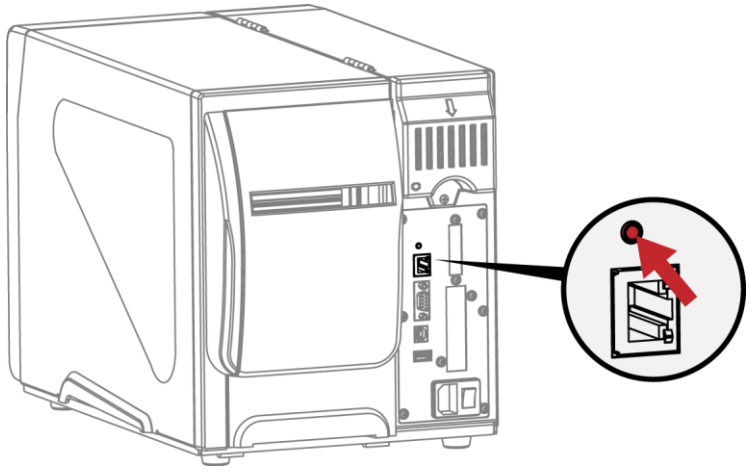

Press C-button for 2 seconds, it will make an auto-sensing to calibrate the label and ribbon's parameters.

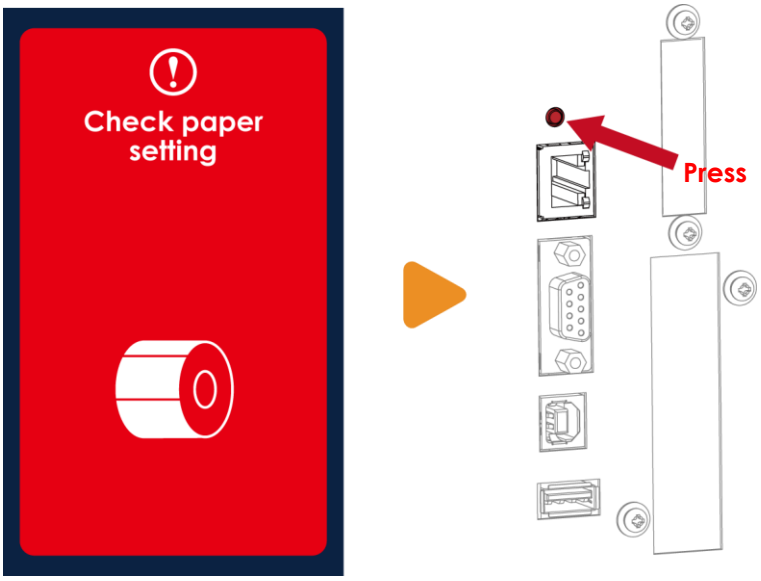

---

* Press C-button is equivalent to the auto-sensing command "~S,SENSOR" that will cancel on-printing-job and make the Label Calibration immediately.

3.5 Error Alerts

In the event of a problem that prevents normal functioning of the printer, you will see an error message on LCD screen and hear some beep signals. Please refer to below table for the error alerts.

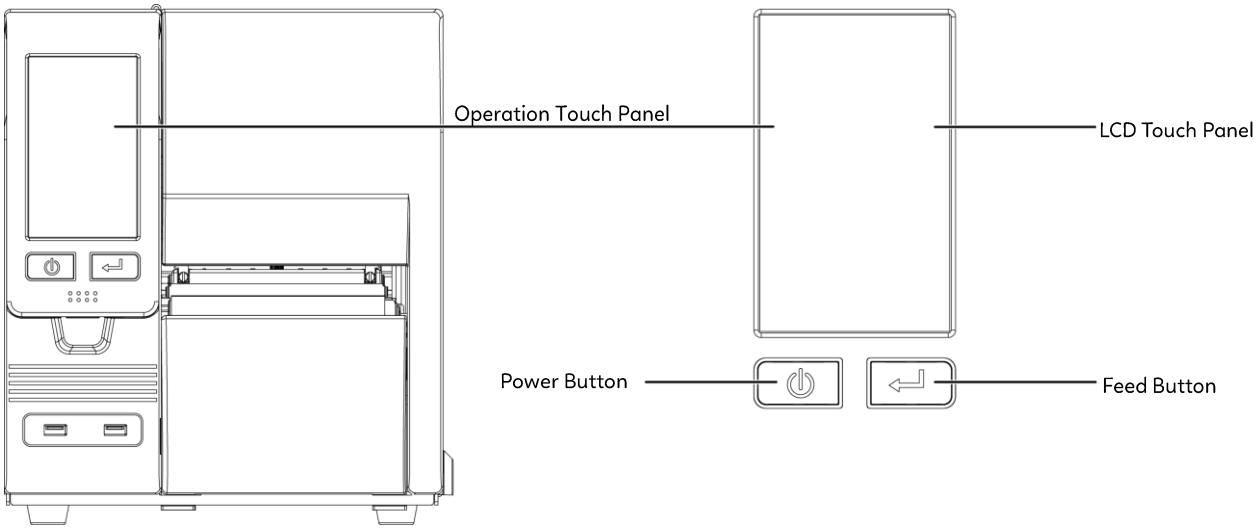

Operation Panel Status	Type	Beeps	Description	Solution
	Print Head Error	2 x 4 beeps	The printing mechanism is not correctly closed.	Open the print mechanism and close it again.
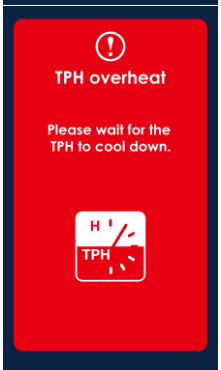	Print Head Error	None	High temperature at the print head.	Once the print head has cooled down, the printer switches to standby mode.
	Media Error	2 x 3 beeps	No ribbon is installed and the printer displays an error.	Make sure that the printer is set to direct thermal printing mode.
			The ribbon is finished or the label supply hub is not moving.	Replace the ribbon roll.

	Media Error	2 x 2 beeps	No paper is detected.	Make sure that the label sensor is positioned correctly. If the sensor still does not detect the paper, run the autodetection function again.
			Paper is finished.	Replace the label roll.
			Printer feed problem.	Possible reasons: the print medium has become trapped around the rubber roll; the sensor cannot detect a gap or black mark between the labels; there is no paper. Please reset the sensor.
	File	2 x 2 beeps	The memory is full. The printer prints the Message "File System full ".	Delete unnecessary data or install additional memory.
			Unable to find file. The printer prints the message "File Name not found"	Use the "~X4" command to print all files. Then check whether the files exist and whether the names are correct.
			A file of the same name already exists. The printer prints the message "Duplicate Name".	Change the name of the file and try storing it again.

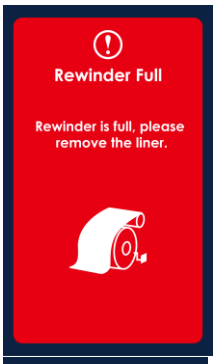

Rewinder Error	None	The rewinder cannot gather anymore liner paper and display the error message on LCD.	Remove all the liner paper and reinstall the liner.

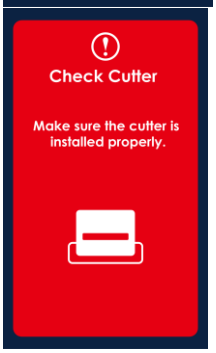

Cutter Error	2 x 2 beeps	No cutter installed.	Make sure the cutter is installed correctly.
		Gives wrong cutter command to the printer.	Send the correct cutter command according to the cutter installation.

3.6 USB Host

Definition : USB Host port supports either device ： USB memory sticks, keyboards or scanners.

Purpose

USB memory stick : It extends the user memory space up to 32GB for Graphic, Font, Label Format, DBF and Command files downloading. The printer's Firmware also can be updating if copy new version of Firmware into USB memory stick.

Connecting an USB keyboard to printer for "Keyboard Mode" mode operation.

Plug-in an USB scanner to operate the printer in "Keyboard Mode".

Usage of Extended Memory

USB memory stick : It supports hot-plugging function; printer will create a Folder "\LABELDIR" and switch "User Flash" to "Extended Memory" automatically while user plugs an USB memory stick into a GoDEX printer.

Connect the USB Stick plugged -in printer to PC via USB Device or Ethernet port and run "GoLabel" software to download Graphic, Font, Label Format, DBF and Command files to the printer.

Details of download procedures, please refer to "GoLabel On-line Help"

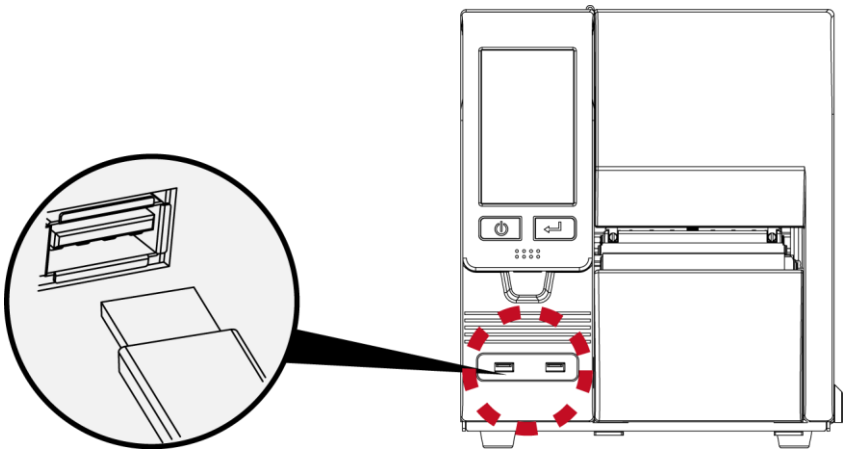

Usage of Firmware Update

The firmware version of printer needs to be V4.001 or higher.

Remove USB memory stick from printer and plug-in it to a PC's USB port; delete Firmware "*.bin" file from "\LABELDIR\FW" of USB memory stick if it existing; or create a Folder "\LABELDIR\FW" to USB memory stick if it doesn't existing.

Copy a new version of Firmware "xxxx.bin" to the Folder "\LABELDIR\FW"; and then remove USB and plug-in back to the printer that going to update Firmware.

The printer will update the Firmware automatically when plug-it-into the printer and printer find-out the Firmware in "\LABELDIR\FW" is newer version.

Only one firmware file is allowed to be saved in the "\LABELDIR\FW" directory. If there are multiple files exist, the file disorder issue will be occurred.

Don't remove the USB memory stick while it's under updating with "Flash Writing..."message that displays on LCD panel.

USB Keyboard

When plug-in an USB keyboard to the printer, LCD touch panel will display “Enter Standalone”, press the “Y” key on keyboard to entering to the dialog for “Keyboard Mode” operation.

Here have six sub-dialogs “Recall Label” “Country Code” “Code Page” “Clock Setting” “Database Setting” “Label Edit” is able operating by keyboard as follow definition:

1. Press “ESC” key to exist from “Keyboard Mode” or back to previous dialog
2. Press “F1”, it will let the printer from “Home screen” mode entering into “Keyboard Mode”
3. Press “Enter”, “Arrow” and “Alphabetic” keys as the usual in PC that will perform the key-in function of “Keyboard Mode”.

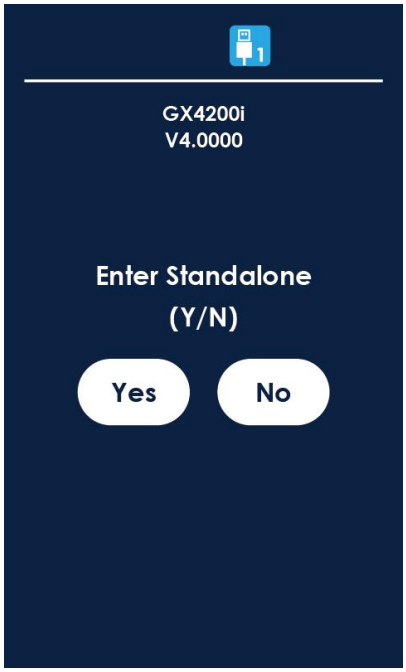

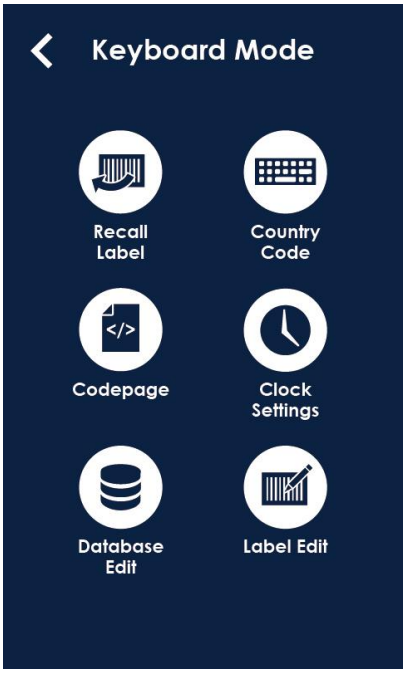

* The USB Host port on GoDEX printer is without “HUB” function.

* The USB Memory Stick supports with “FAT32”Disk Format and up to 32GB only. The certified venders are Transcend, Apacer, Patriot, Consair and Kingston.

* On a PC, user may copy entire folder”\LABELDIR” from USB memory stick to PC or vice-versa. Copy a sub-folder or individual file in “\LABELDIR” to PC or vice-versa is not supported.

* The USB port is only for 500mA and is not recommended for charging electronic products.

4 NetSetting for Ethernet

4.1 Installing the NetSetting software

The NetSetting software is used to manage the network configurations when connecting the printer via Ethernet port.

It can be downloaded from official website. (www.godexintl.com)

To install the NetSetting, please follow below steps.

1. Select the icon for the NetSetting installation file and click it to start the installation.

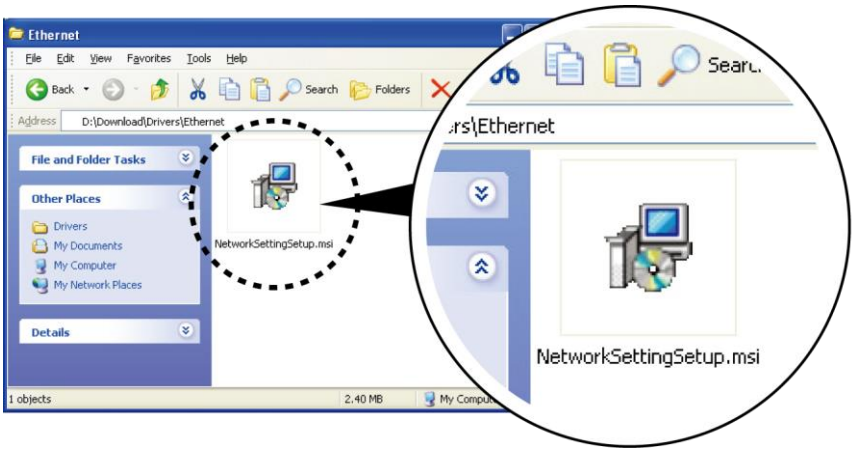

2. Follow the instructions on the screen. The Setup Wizard guides you through the installation procedure.

3. Specify the “Installation Folder".

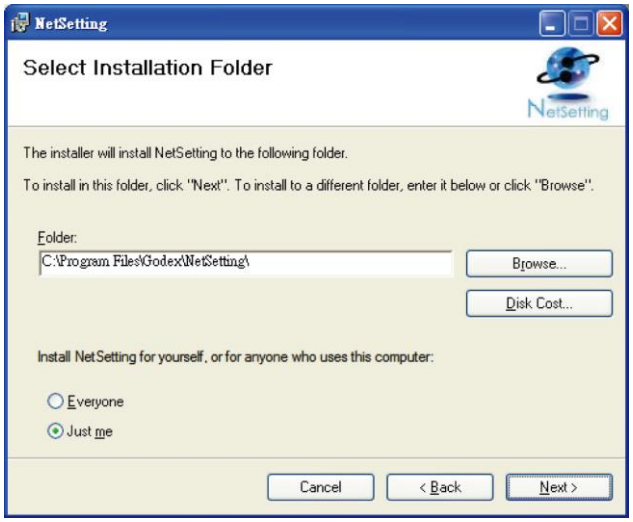

4. Click ”Next” to start the installation.

5. Once the installation is completed; you will see the NetSetting icon on your desktop.



4.2 The Interface of NetSetting

Click the NetSetting icon to start the program; you will see the start page as below. The start page will display the basic information of connected printer and your PC.

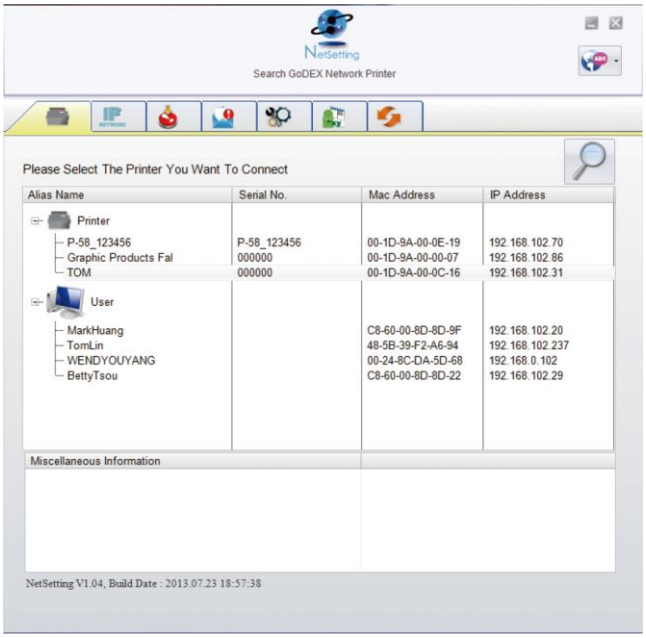

Click the magnifier icon to search the Godex printers which are connected via Ethernet port in you network environment. Once a connected Godex printer is detected, it will be listed on the start page.

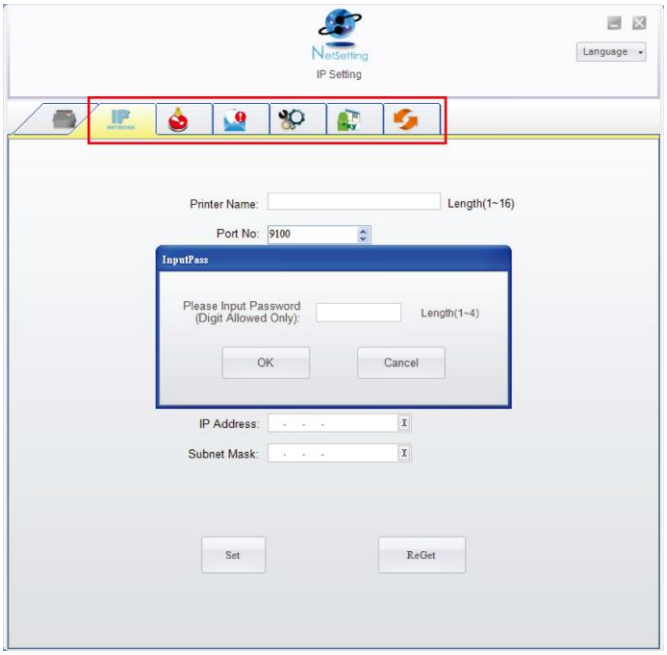

There are six tabs on the top of interface which can configure different types of network settings. But for the data security reason, you need correct password to enter the configuration pages.

---

* The default password is “1111”, you can change the password later from the “IP Setting” tab.

IP Setting

The IP Setting tab can change the printer name, Port number, Gateway setting and the password for configuring the printer. You can also set the printer's IP address ether by DHCP or by Static IP.



You can press "Set" button to apply the settings and "Refresh" button to refresh the setting values.

* To fully benefit from the NetSetting software, you should be familiar with basic networking principles. Please contact your network administrator for related network setting information.

* When enabling DHCP, if you find the IP Address as: IP = 169.254.229.88, Netmask = 255.255.0.0,Gateway = invariable (last value), the IP Address is invalid.

Alert Path Setting

NetSetting will send the alert messages to designate mail account when error happened on printer. The alert messages are sent by SMTP (Simple Mail Transfer Protocol) or SNMP (Simple Network Management Protocol).

You can set or change the configurations of SMTP and SNMP on this “Alert Path Setting” tab.



You can press “Set” button to apply the settings and “Refresh” button to refresh the setting values.

Alert Message Setting

For the alert message notification function, you can decide which error cases need to be sent out to the operator. Moreover, the alert messages can be set to be sent by SMTP, SNMP or both.



You can press “Set” button to apply the settings and “Refresh” button to refresh the setting values.

Printer Configuration

Set or change the configurations of connected printer. Most of key settings for the printer operation can be done by this setting page.



You can press “Set” button to apply the settings and “Refresh” button to refresh the setting values.

User Command

The “User Command” tab provides a communication interface for operator to control the printer.

Input printer commands in "Input Command" window and press “Send Command” button, the commands will be sent to the printer.

For some commands that will return a response message, the message will be displayed in "Output Message" window.



You can press “Send Command” button to send printer commands via Ethernet port and control the printer remotely.

Firmware Download

On “Firmware Upgrade” tab, the current version of printer firmware will be showed on the screen. If you need to update the printer firmware, just specify the file location of firmware file and press “Start Download Firmware” button. The printer firmware then can be updated remotely.

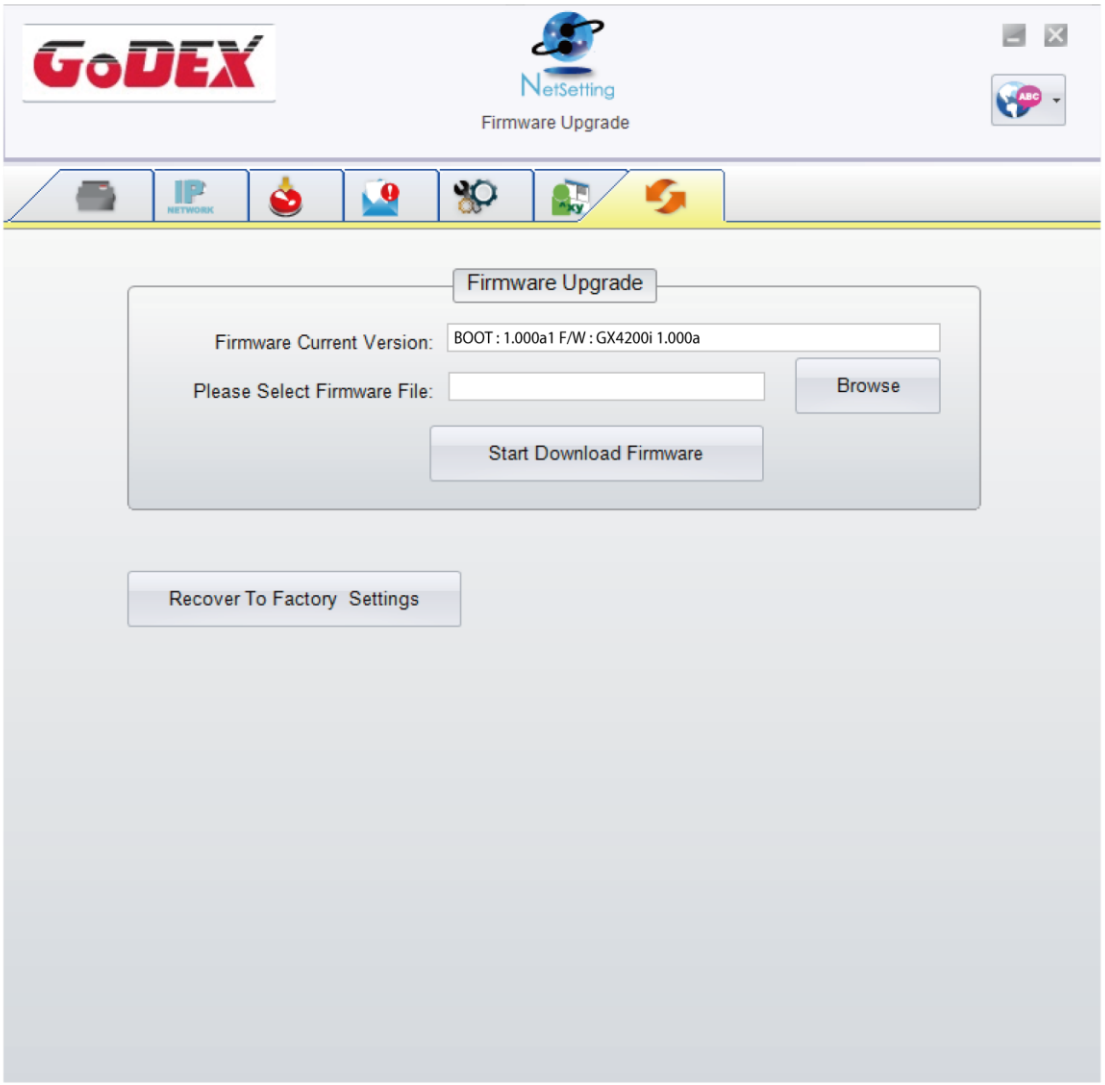

In addition to the firmware update, you can press “Recover To Factory Settings” button to restore the printer configurations back to factory default.

5 Accessories

5.1 Preparation Steps

Before installing the optional modules, please make some preparations as follows.

1. Turn off the printer:

   Remember to switch off the printer before installing any module.

2. Open the printer cover

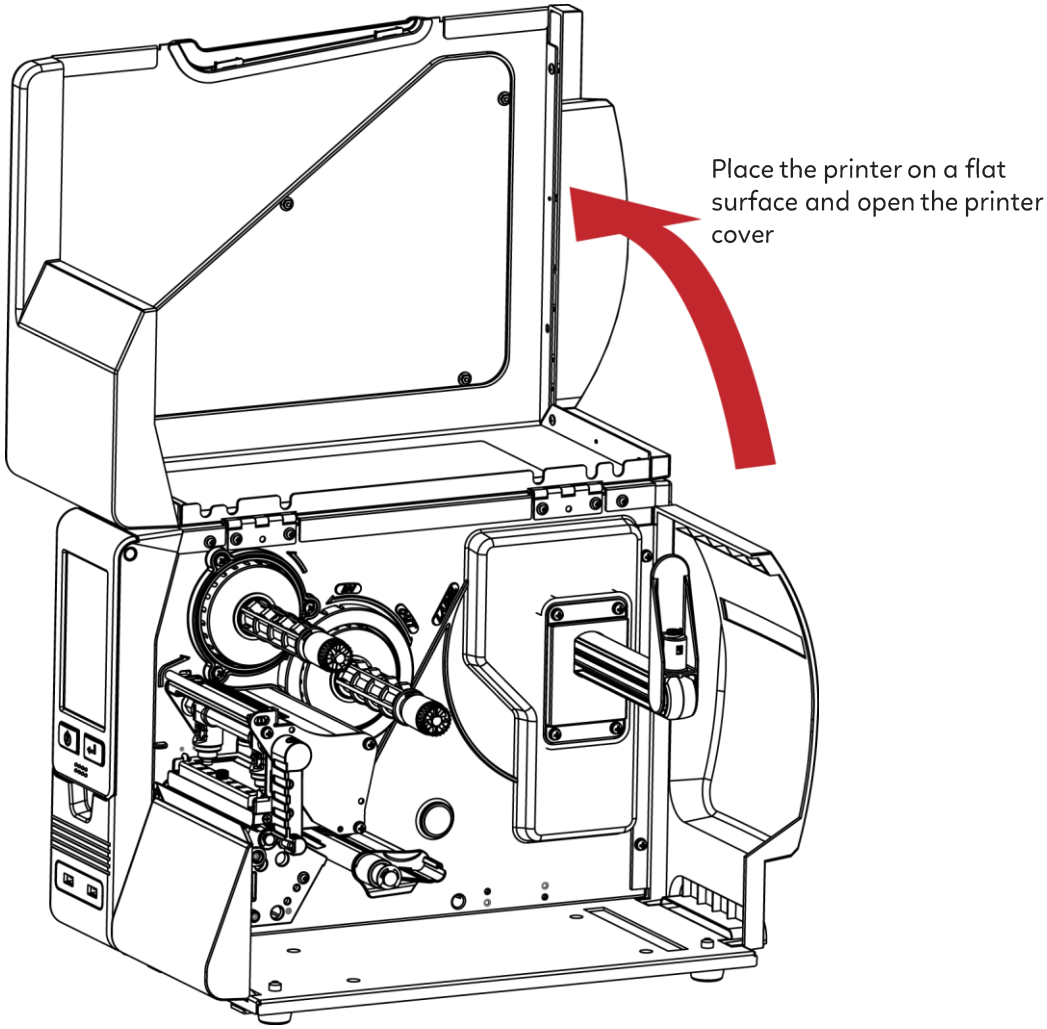

5.2 Installing the Cutter

The overview

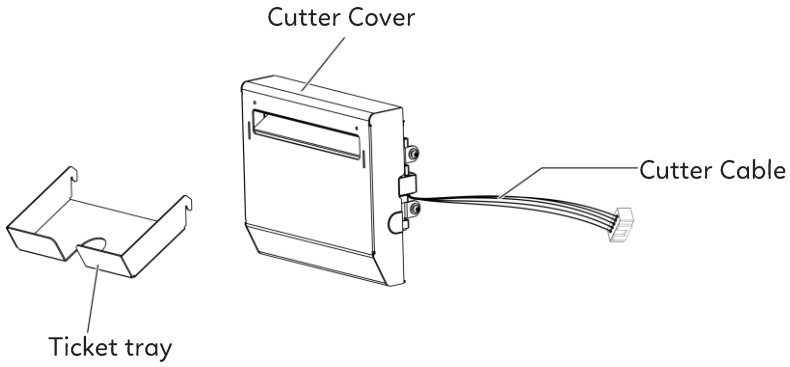

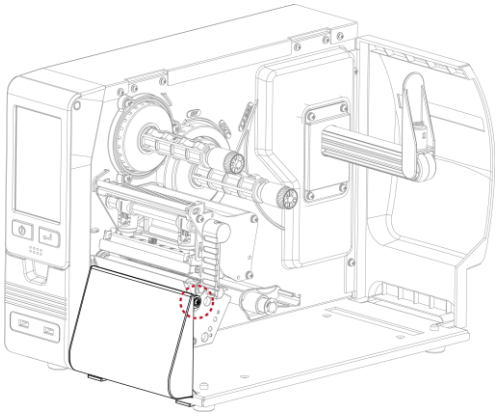

Unscrew the screw marked in the illustration on the front of the printer, which secures the lower cover plate.

Remove lower cover plate to the a little bit right then get out.

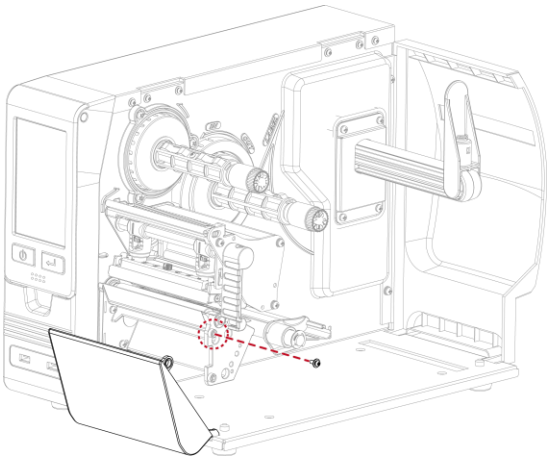

* Remember to switch off the printer before installing the cutter.
* Do not cut adhesive labels! Glue residue will be left on the cutter blade and impair its functioning.
* Under the ordinary paper application condition, the cutter performs 300000 cuts of a heavy paper with up to 250 µm thick or 100000 cuts of a plastic sheet with up to 300 µm thick.
* The cutter is an optional accessory. If the cutter is installed, it is not suitable for children to approach.

Connect the cutter cable connector to the cutter jack on the printer.

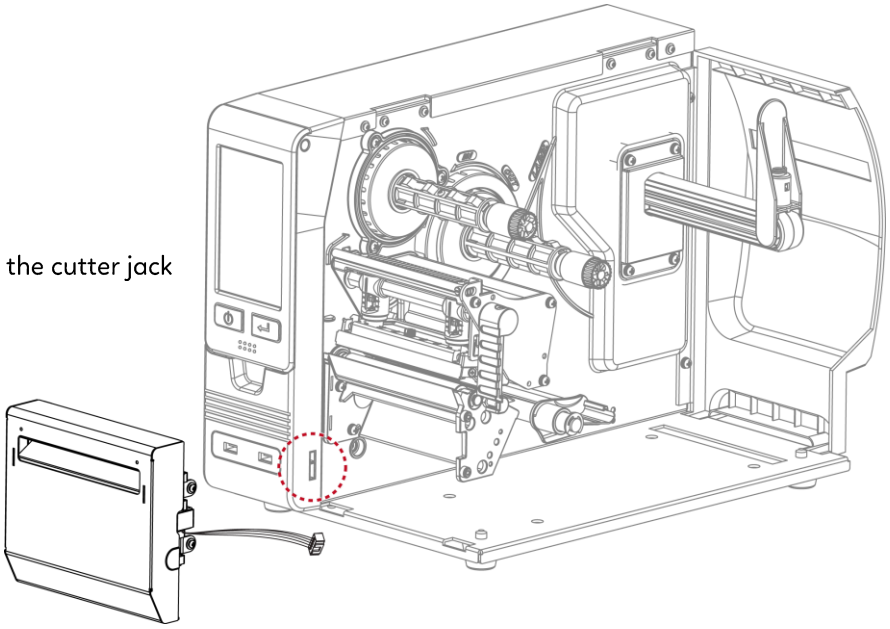

Be sure the cutter module insert to the printer properly. (see red arrow)

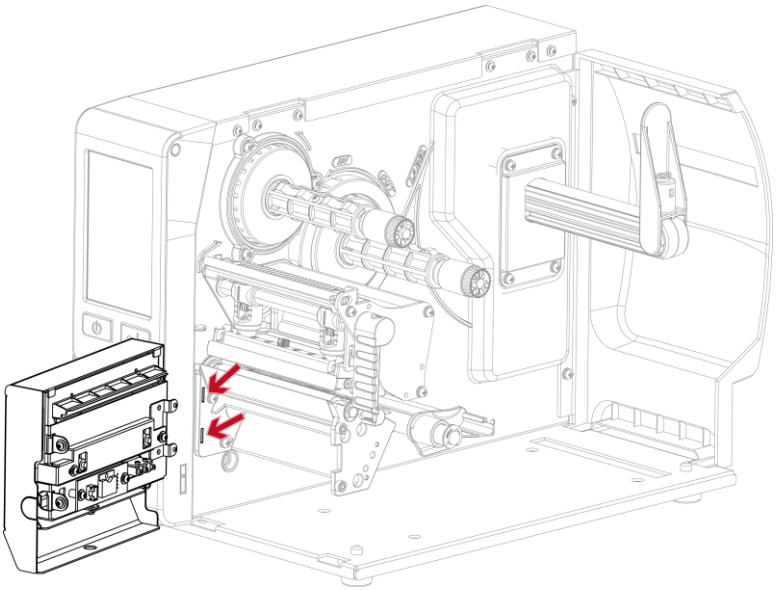

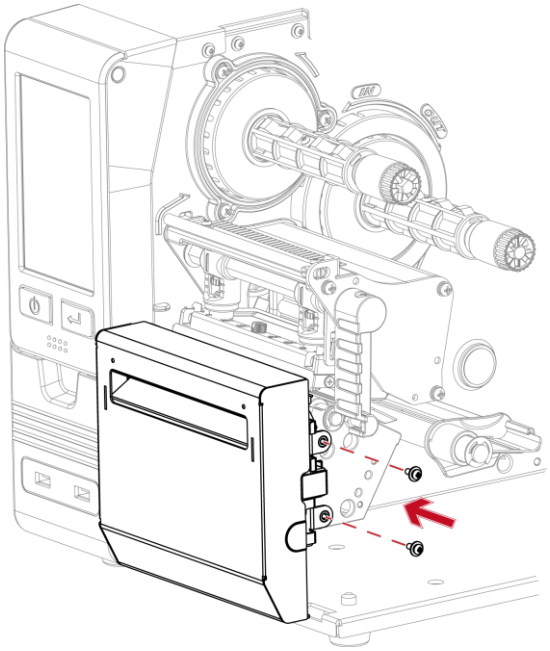

Secure the cutter module on the printer housing using the screws.

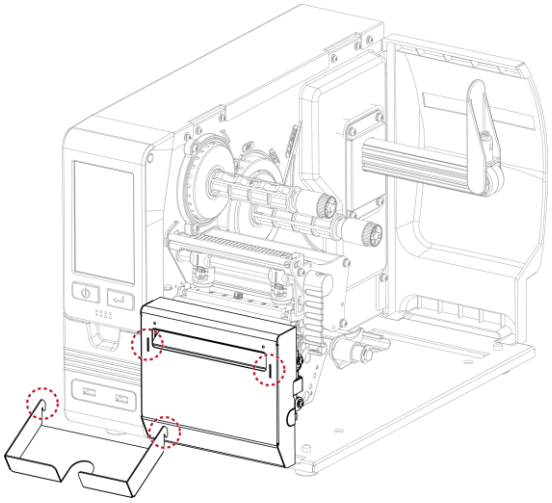

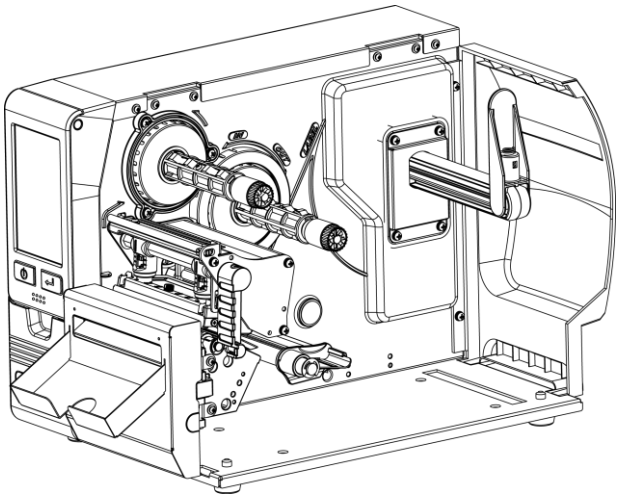

Install the ticket tray to complete the installation

* Check whether the cutter function is enabled in the printer.

* Labels or paper should be at least 30 mm high.

* After installation of the cutter module, set the stop position (^E) to 30.

Cleaning Method

1. Remove the screws and cover.

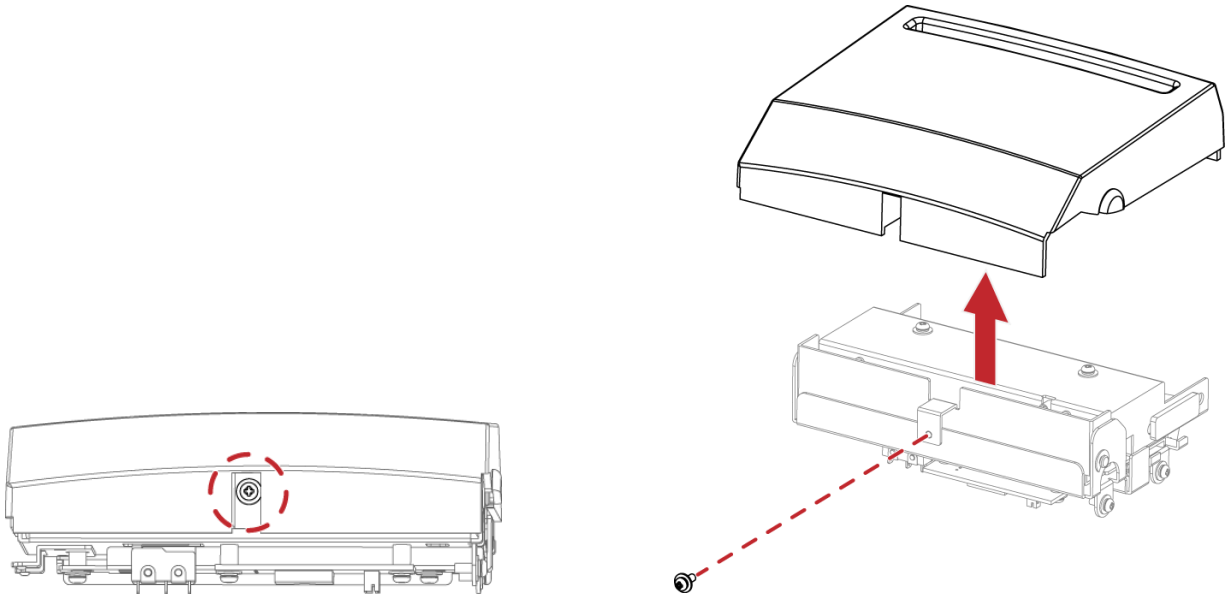

2. Wipe with a cotton swab or dry lint-free cloth

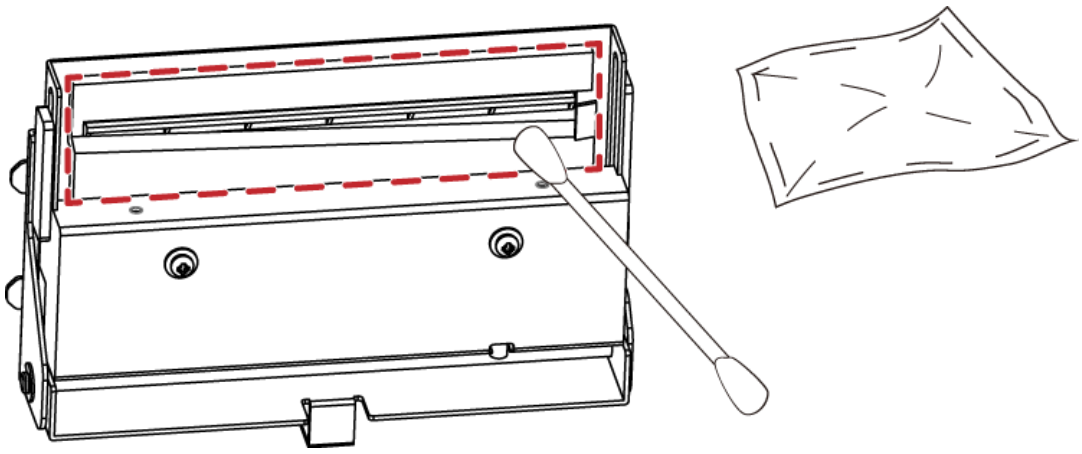

5.3 Installing the High-Speed Cutter

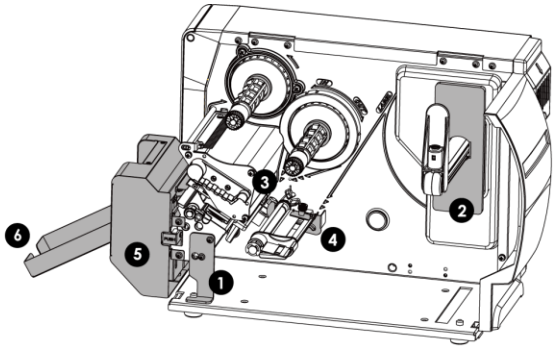

1 Platen module bracket



2 Plastic tubes & Label stop plate

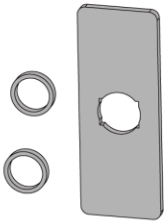

3 Label bracket

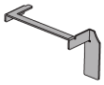

4 Label holder - Up



Label holder - Down



5 High-speed cutter

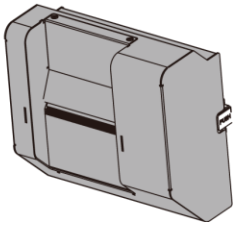

6 Ticket tray

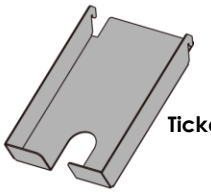

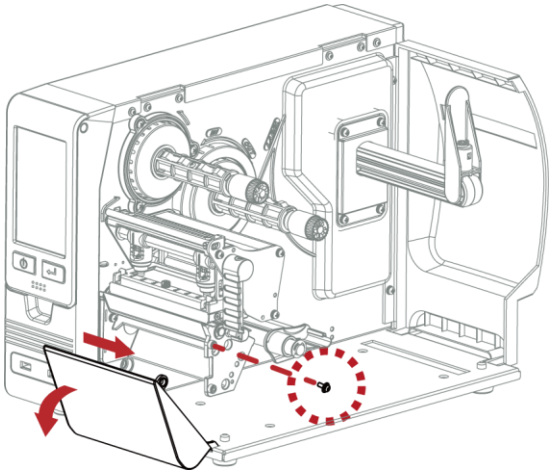

1.Loose the screw(as the picture shows).

2. Tilt the front cover forward and move it to the right and release.

1

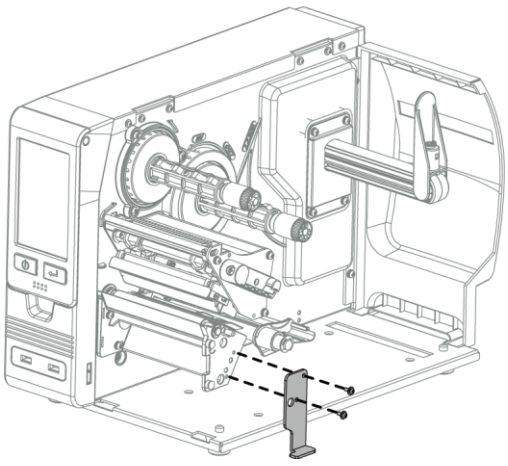

1.Assemble the Platen module bracket.

2

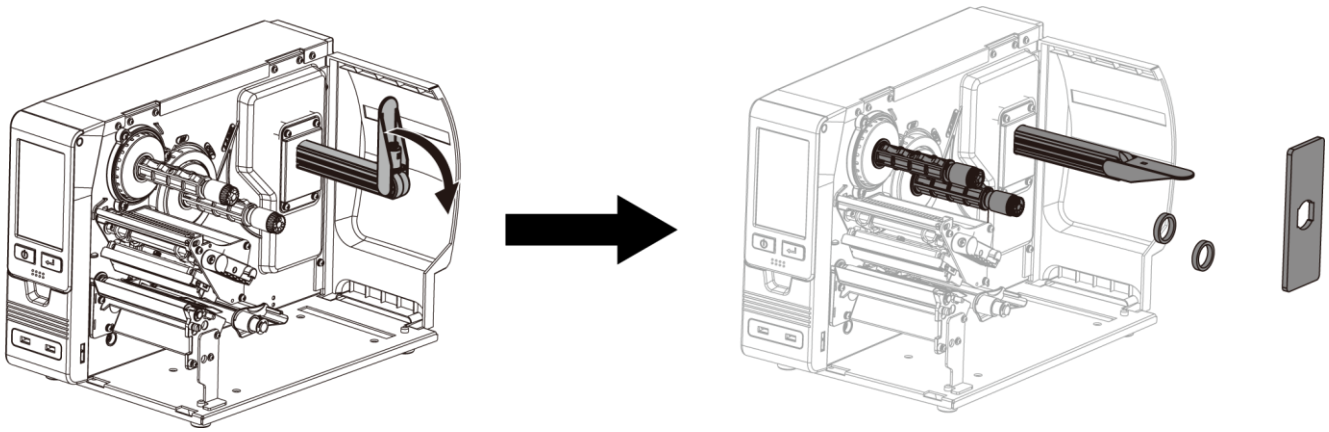

1. Assemble the label stop plate and plastic tubes.

(Please remove the double-sided adhesive backing paper on the label stop plate.)

---

3 4

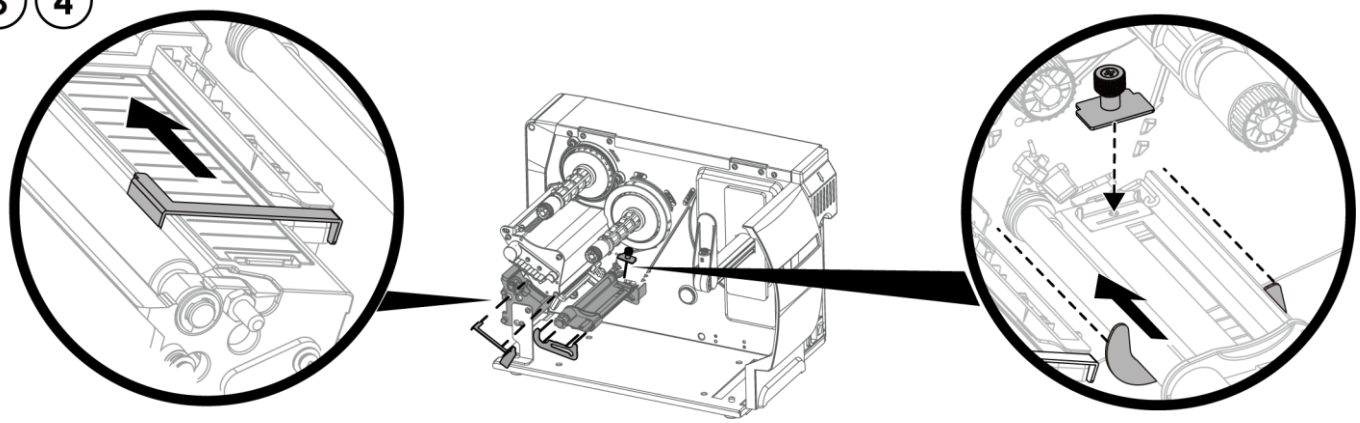

1. Install the label bracket and the label holders respectively. During the installation, push the parts to the left end and fix them with double-sided tape.

(Please remove the double-sided adhesive backing paper on the label bracket and

label holder first.)

5

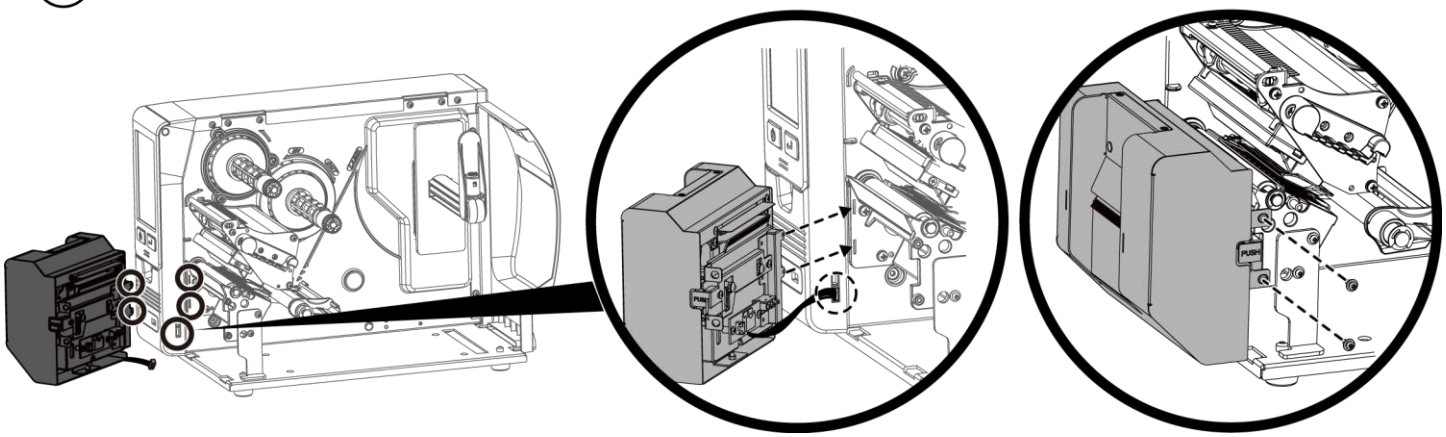

1. When installing the cutter, plug in the cable first, then insert the left side of the cutter into printer's mechanism (as shown in the picture).

2.Finally fix the cutter with screws (as shown in the picture).

6

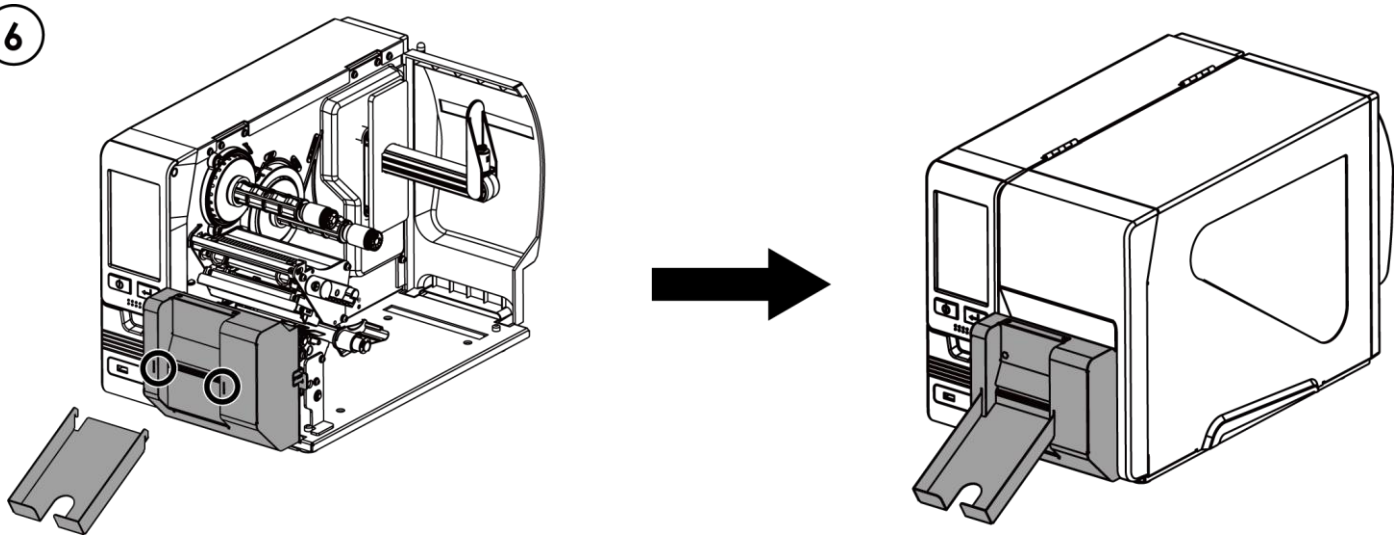

1. Snap the ticket tray to the cover of cutter to complete the installation.

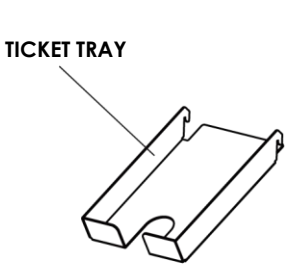

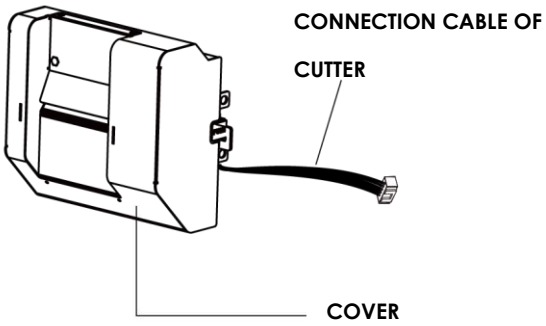

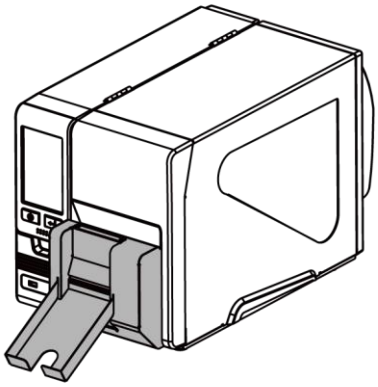

The applicable F/W version is V2.100 or above

Notification

* Power off the printer and remove the cable from the electric socket before installing the cutter module.

* Labels with adhesive glue are not applicable or otherwise could result in malfunction.

* Applicable label size is at maximum width of 75mm and minimum length of 30mm. (The use of labels exceeding this range will be excluded from the terms of the warranty.)

* Stop position (E value) should be set to 46 through GoLabel before using the cutter.

*After the cutter is installed, please send the following commands through Golabel to activate the high-speed cutting function.

^XSETCUT,MODE,0,1 → enables high-speed cutting function

^XSET,SMARTBACK,1 → enables pre-print function

^D1,280 → enables cutter function

* The label width setting should be 6mm wider than the original design → For example: the actual paper width is 35, Command needs to set ^W41

* The horizontal displacement needs to be set to 48

* Before using the High-Speed Cutter, an anti-static brush needs to be installed on the printing mechanism.

Cleaning Method

1. Remove the ticket tray

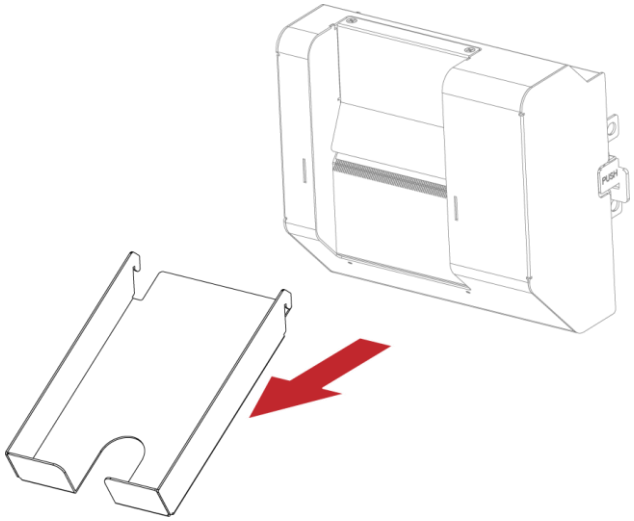

2.Remove the screws and cover.

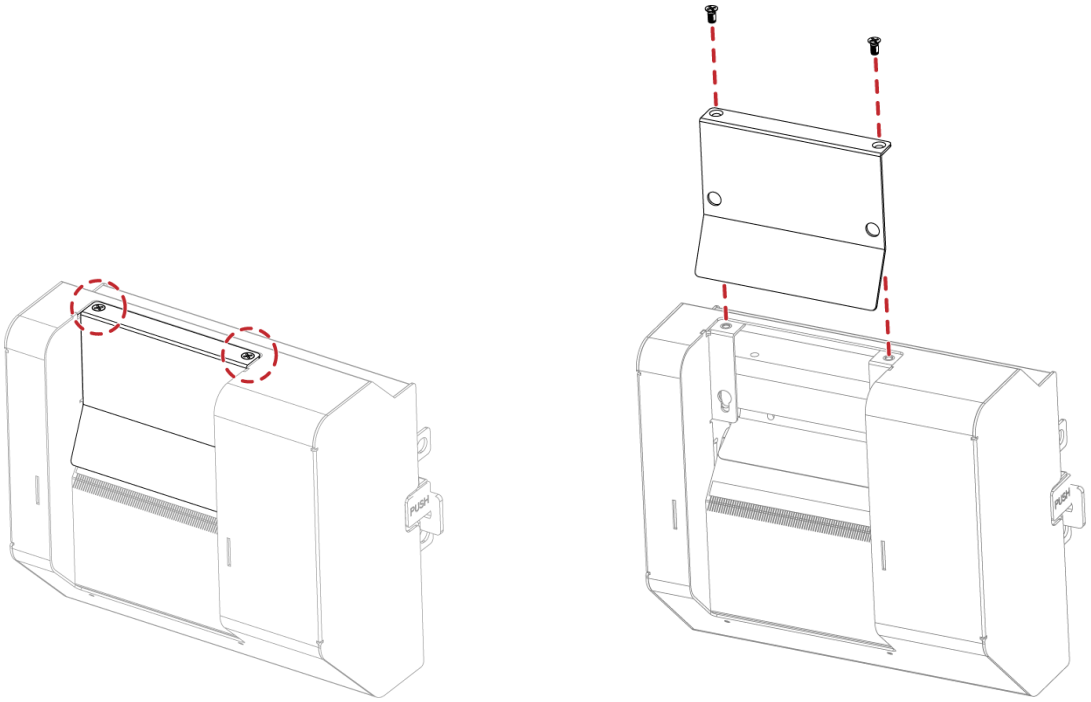

3.Wipe with a cotton swab or dry lint-free cloth.

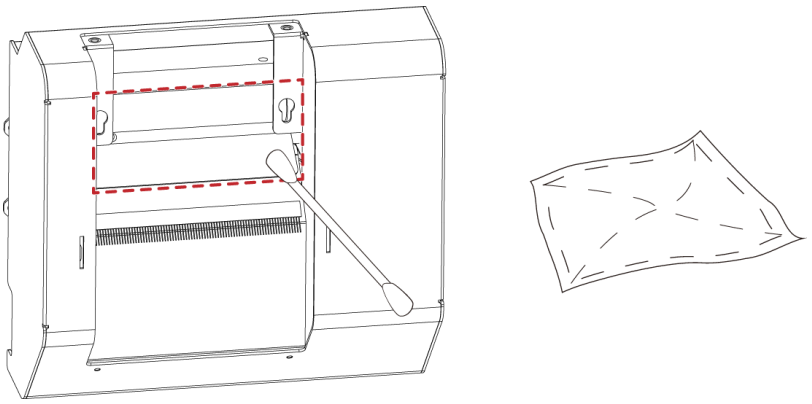

5.4 Installing the Paper Card Cutter

Overview of Cutter

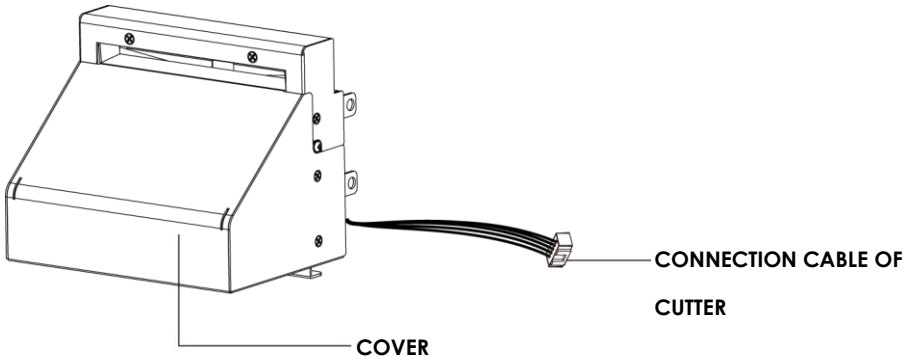

Caution

* Power off the printer and remove the cable from the connector before cutter module installation

* Labels with adhesive glue or inner roll are not applicable or otherwise could result to malfunction

* Applicable label size is at maximum width of 118mm and minimum length of 30mm. (Usage with labels outside this range will be excluded from warranty terms)

* Stop position (E value) should set to 32 through GoLabel before using the cutter

* After the cutter is installed, please send the command ^D1,5 through Golabel to set the cutter.

This cutter module is suitable for Firmware V2.100 or later.

Preparation Steps

For more details about the preparation steps to install optional modules, please refer to this Manual.

Installation Steps:

(Power off the printer and remove the power cable before installing the cutter module)

1.Loose the screw (as circle indicated).

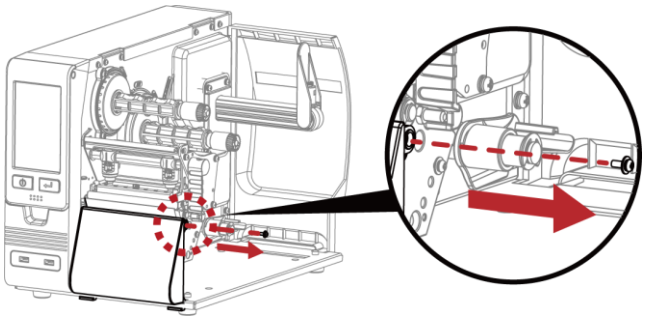

2.Remove the cover panel by pushing to the direction of right-hand side.

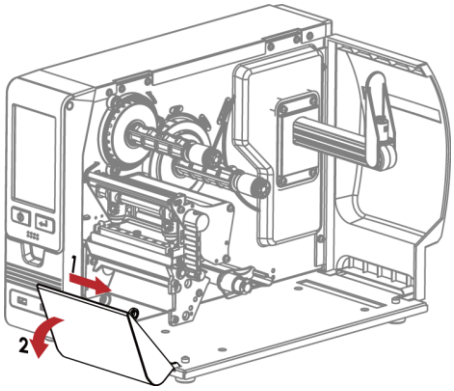

3.Plug in the cable connector to the bottom 5-PIN jack of printer's left panel

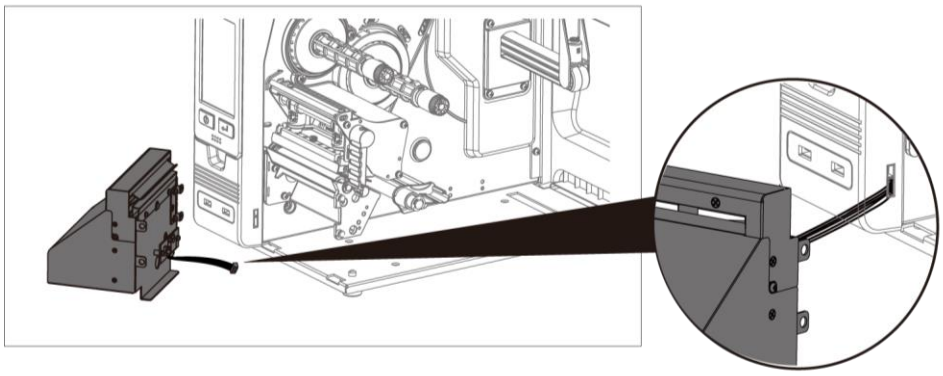

4.Insert the cutter module to dock with the printer

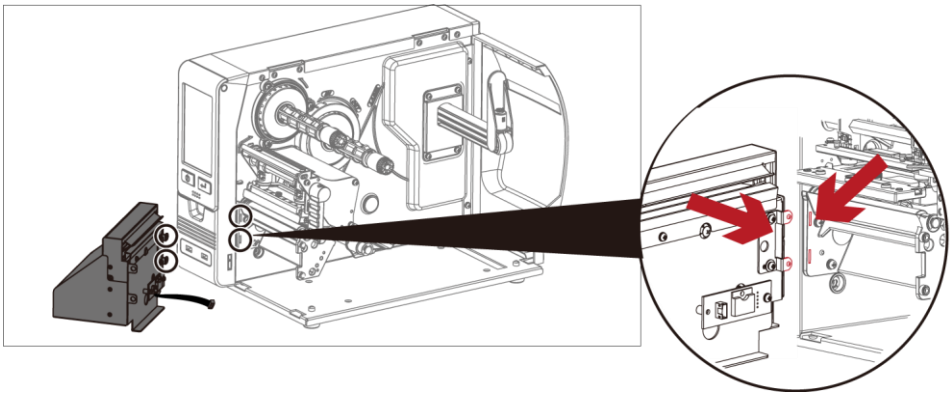

5. Hold the cutter module firmly and tighten the screw

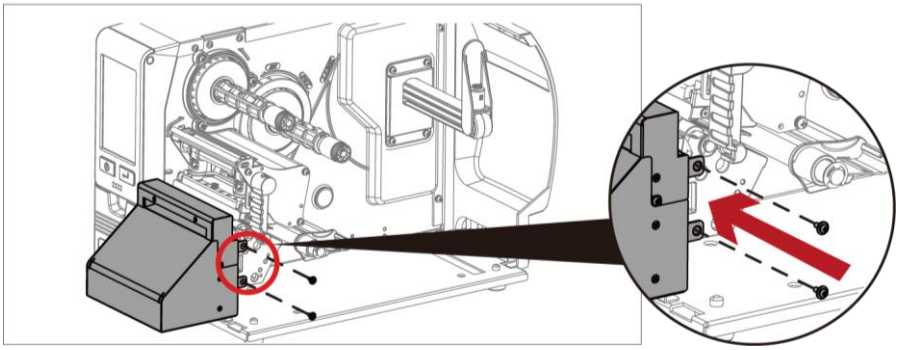

6.Installation is now complete

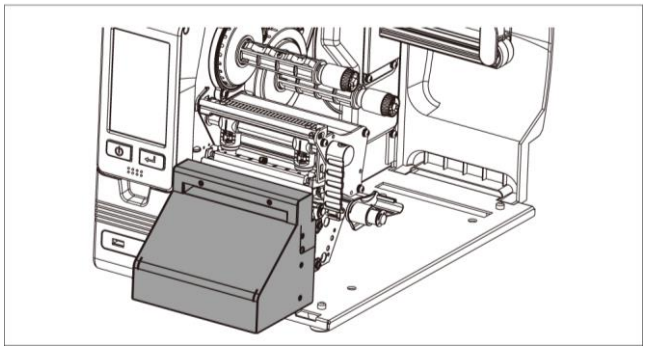

7.Load consumables and close printer cover

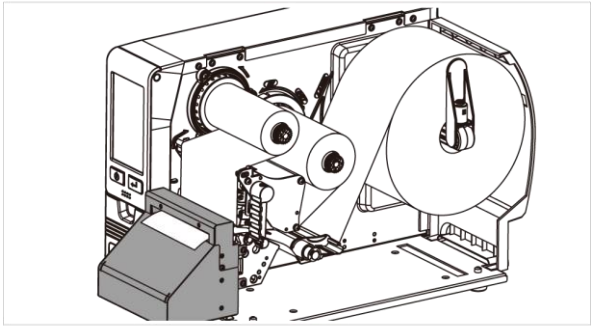

* Printer power should be off when plugging the connector to avoid malfunction

Cleaning Method

1.Remove the screws and cover.

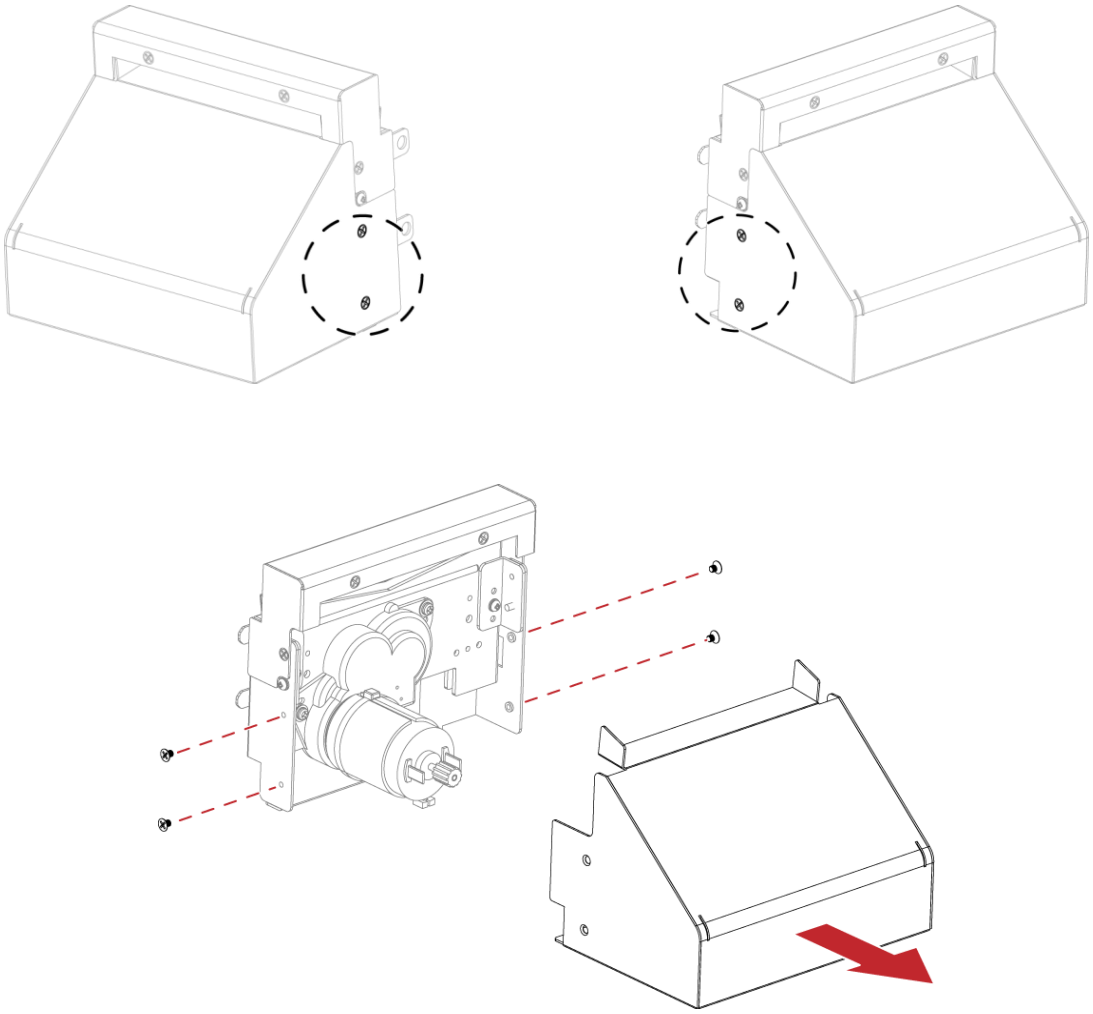

2. Wipe with a cotton swab or dry lint-free cloth (turn the gear to adjust the angle of the cutter)

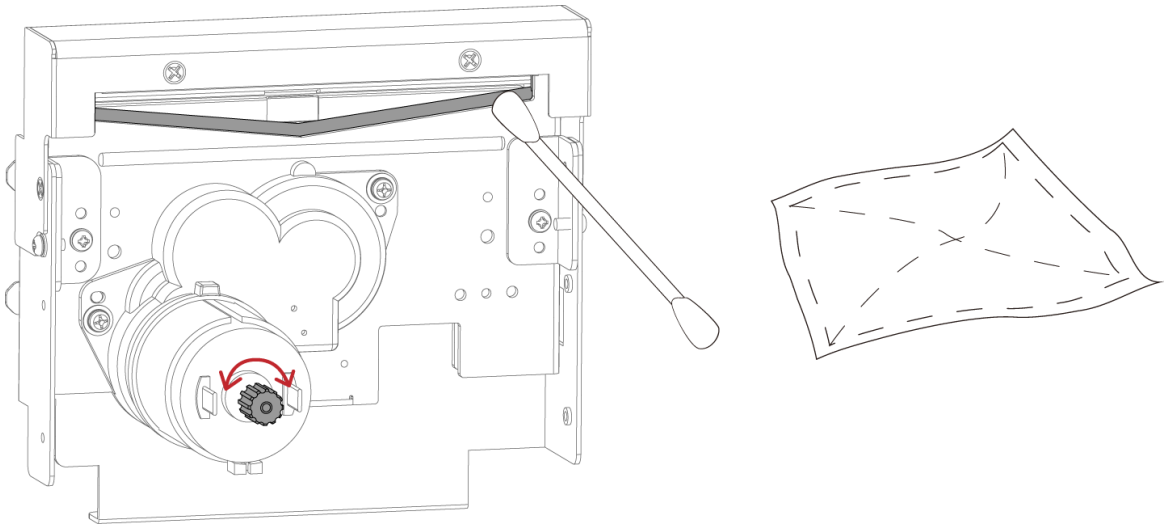

5.5 Installing the Perforation Cutter

Overview of Cutter

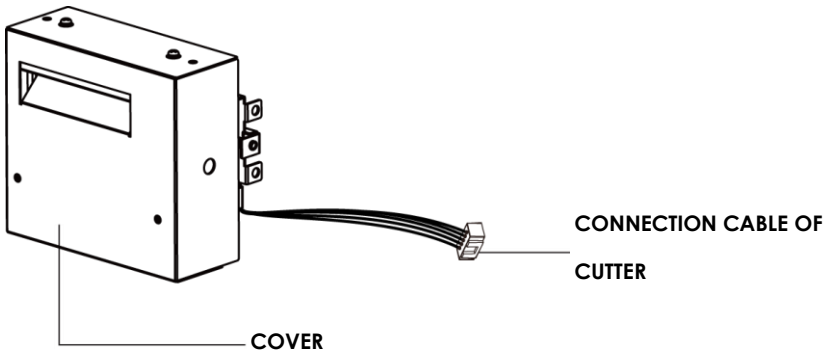

* Power off the printer and remove the cable from the connector before perforation cutter module installation

* Labels with adhesive glue are not applicable or otherwise could result to malfunction

* Applicable label size is at maximum width of 80mm and minimum length of 30mm. (The use of labels exceeding this range will be excluded from the terms of the warranty.)

* Stop position (E value) should set to 51 through GoLabel before using the perforation cutter.

* After the cutter is installed, please send the command ^XSETCUT,MODE,0,2 through Golabel to activate the cutter.

* After the perforation cutter is installed, please send the command ^D1,5 through Golabel to specify the cutter type(perforation cutter).

* Command : ^XSETCUT,MODE,0,2→Full Cut ‧ ^XSETCUT,MODE,1,2→Perforation Cut ◦

This cutter module is suitable for Firmware V2.100 or later.

Preparation Steps

For more details about the preparation steps to install optional modules, please refer to this manual.

Installation Steps:

(Power off the printer and remove the power cable before installing the perforation cutter module)

1.Loose the screw (as circle indicated).

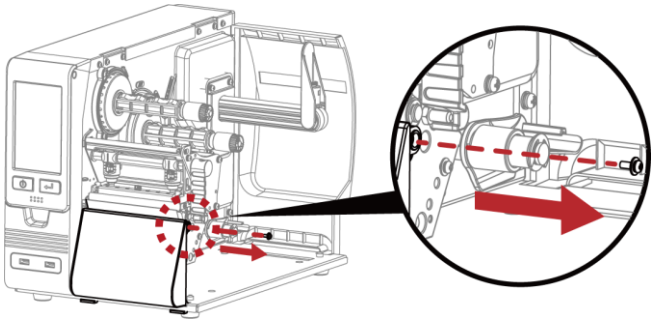

2.Remove the cover panel by pushing to the direction of right-hand side.

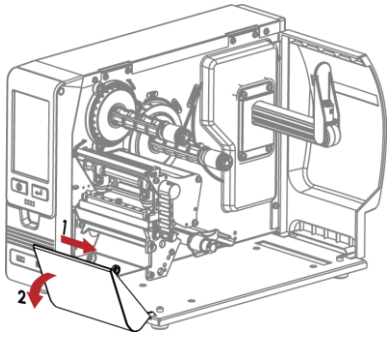

3.Plug in the cable connector to the bottom 5-PIN jack of printer's left panel.

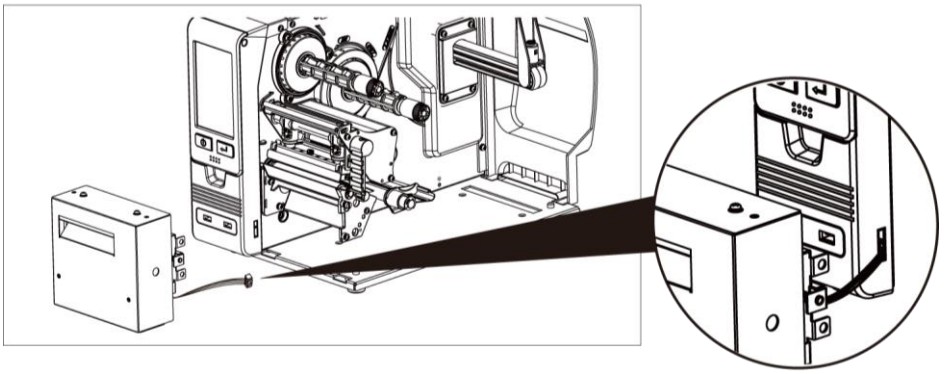

4.Insert the perforation cutter module to dock with the printer.

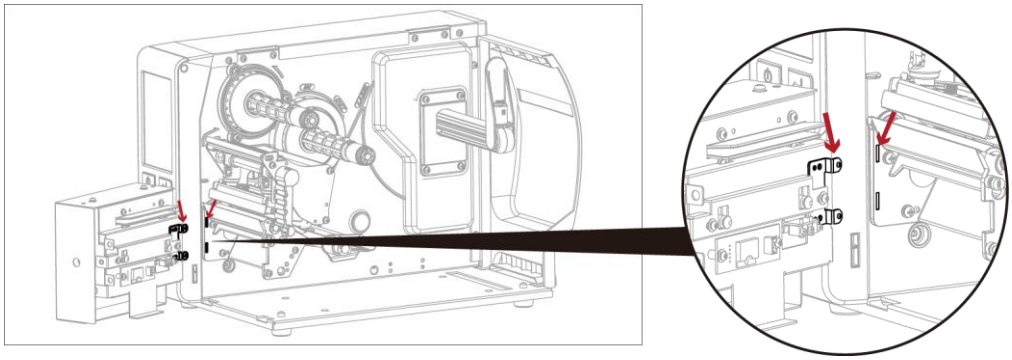

5.Hold the perforation cutter module firmly and tighten the screw.

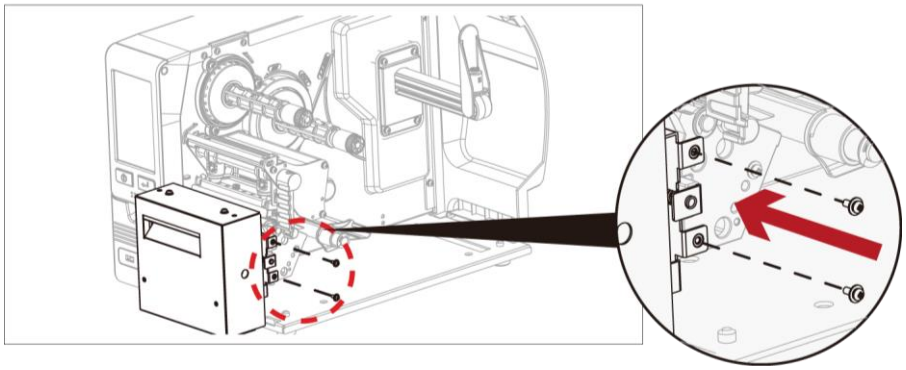

6.Installation is now complete.

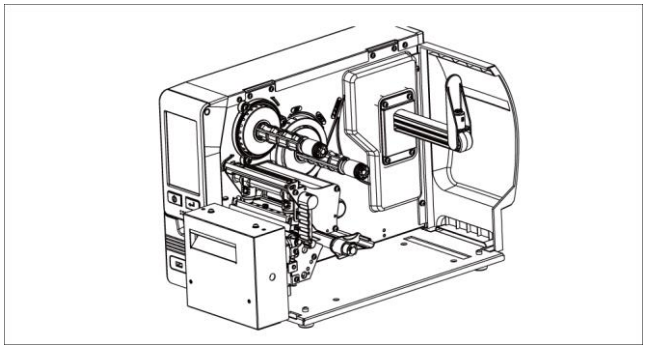

7.Load consumables and close printer cover.

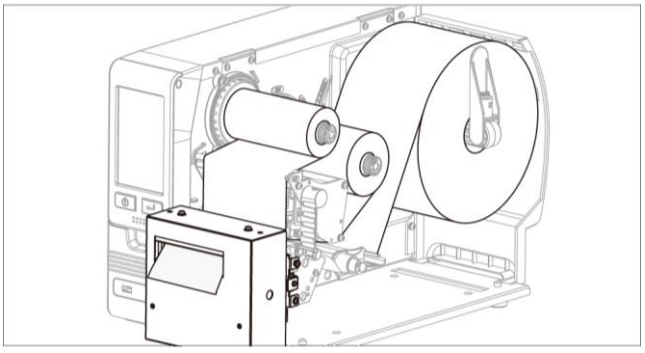

* Printer power should be off when plugging the connector to avoid malfunction.

Cleaning Method

1.Remove the screws and cover.

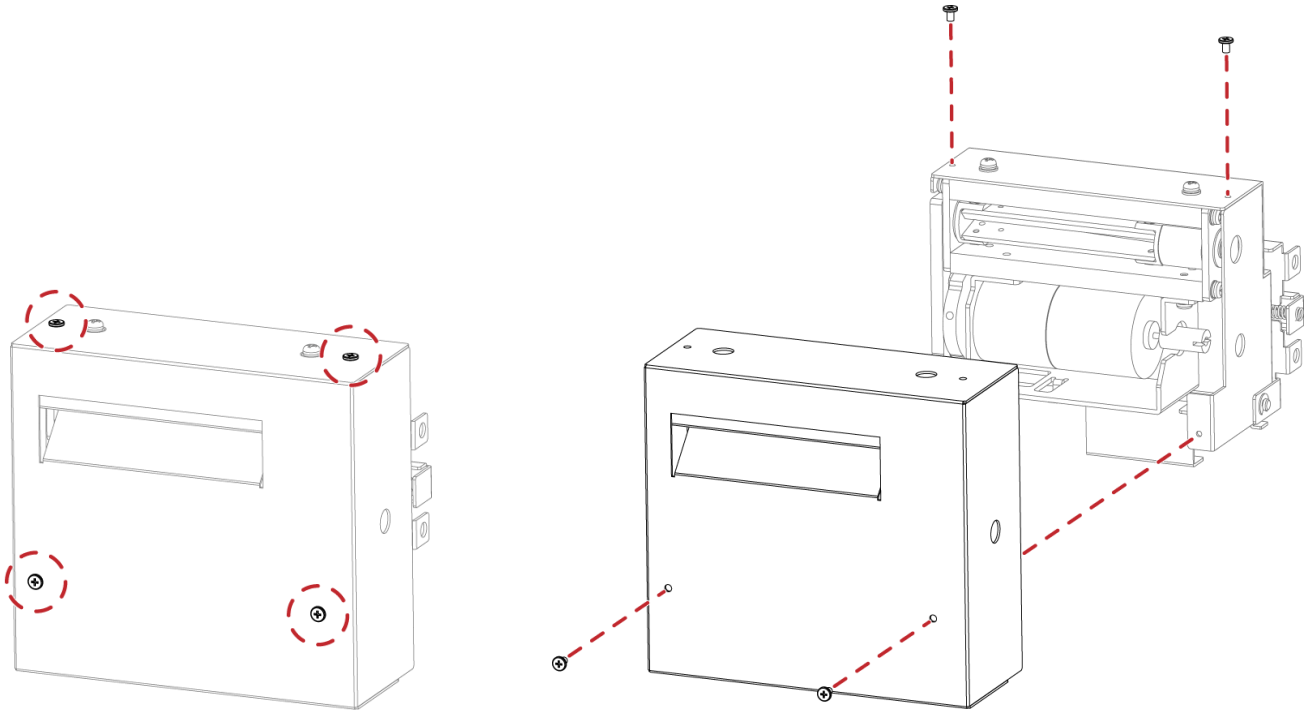

2. Wipe with a cotton swab or dry lint-free cloth (turn the gear to adjust the angle of the cutter)

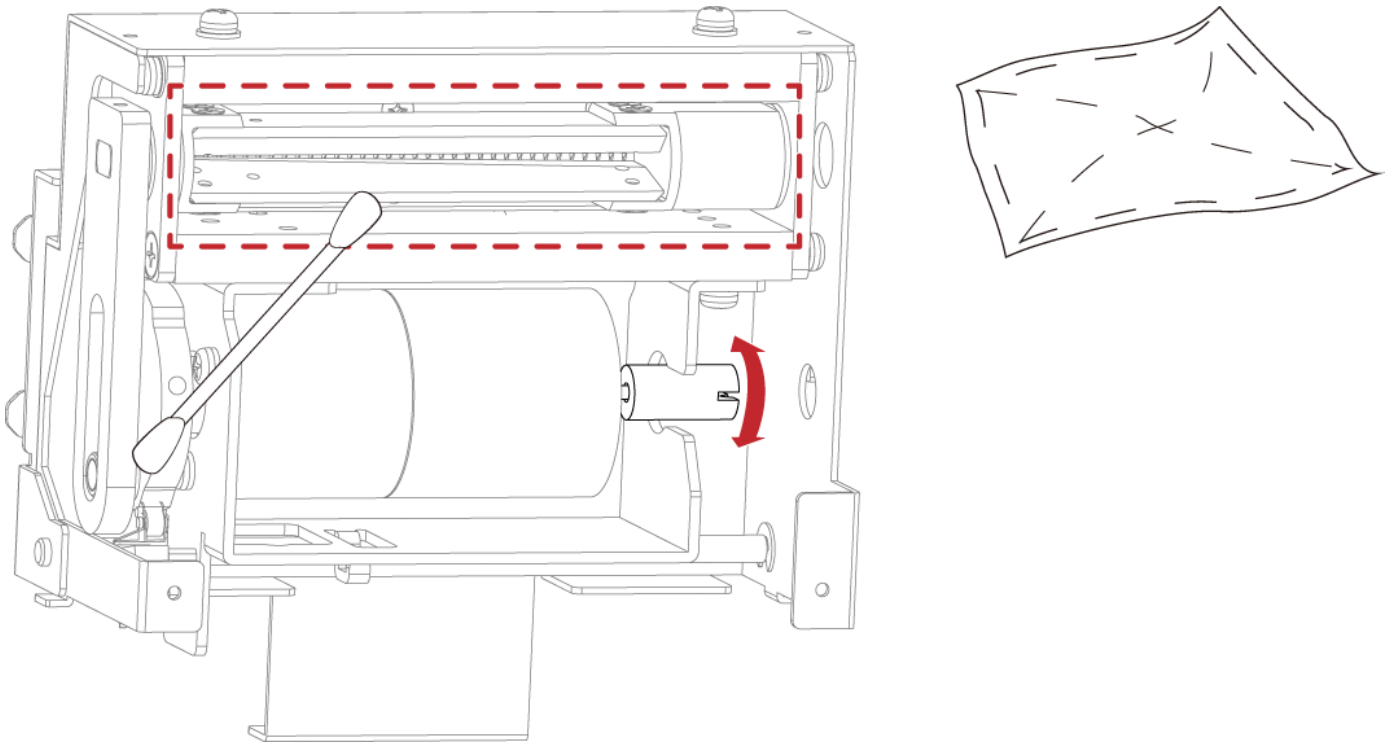

5.6 Installing the Internal Rewinder Module

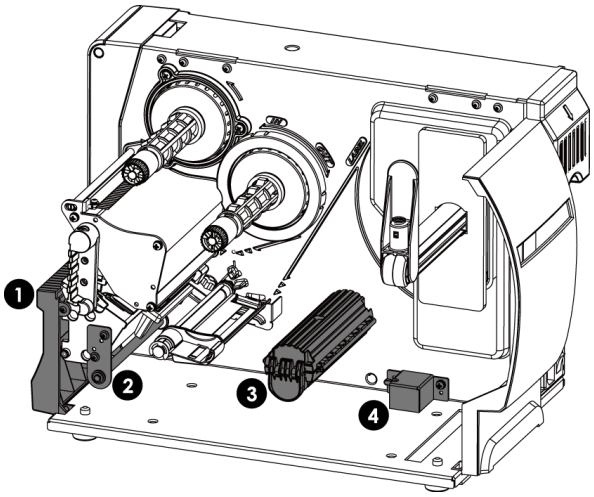

1

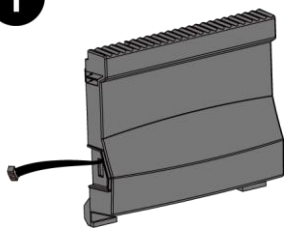

Label Dispenser

2

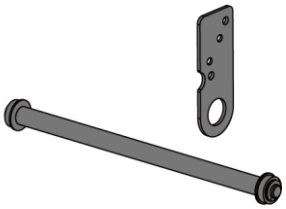

Rewinder Shaft Holder Bracket
&
Rewinder Bracket Shaft

3

Rewinder Full SW ASS'Y

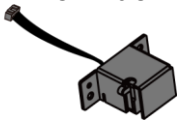

4

Rewinder Shaft
&
Slip Clutch



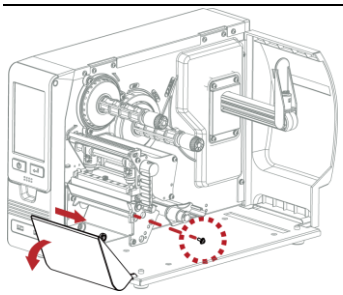

1. Loose the screw (as the picture shows).
2. Tilt the front cover forward and move it to the right and release.

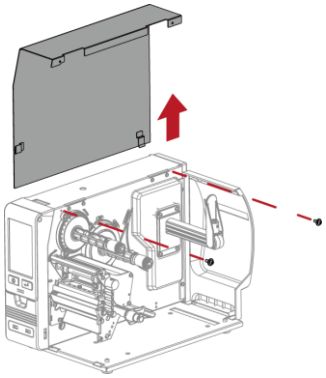

1. Remove the screws of the left upper cover, and disassemble the left upper cover.

1

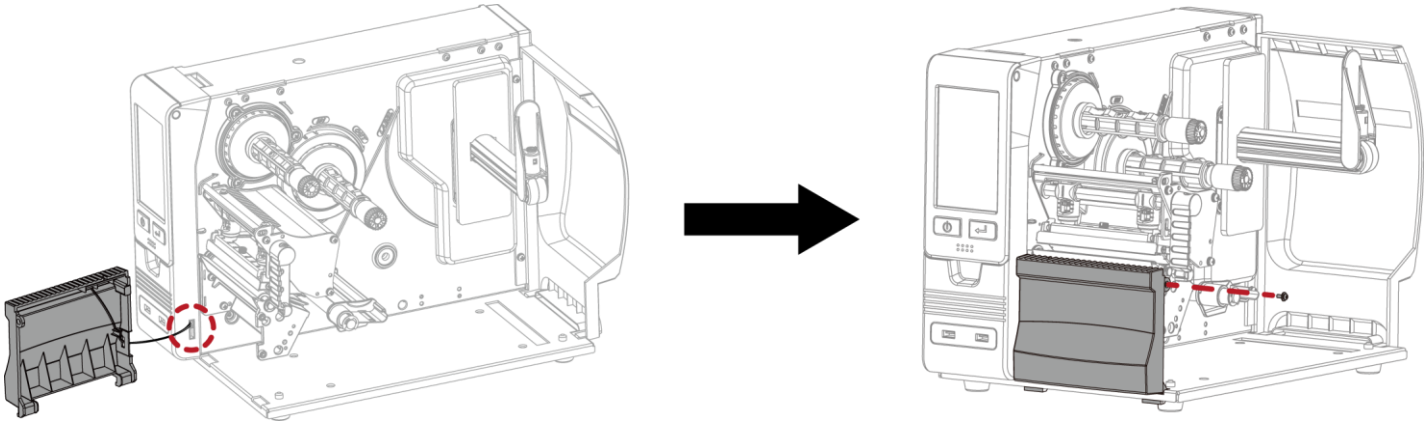

1. Connect the cable of the stripping sensor to the printer.
2. Fix the dippenser to the printer.

2

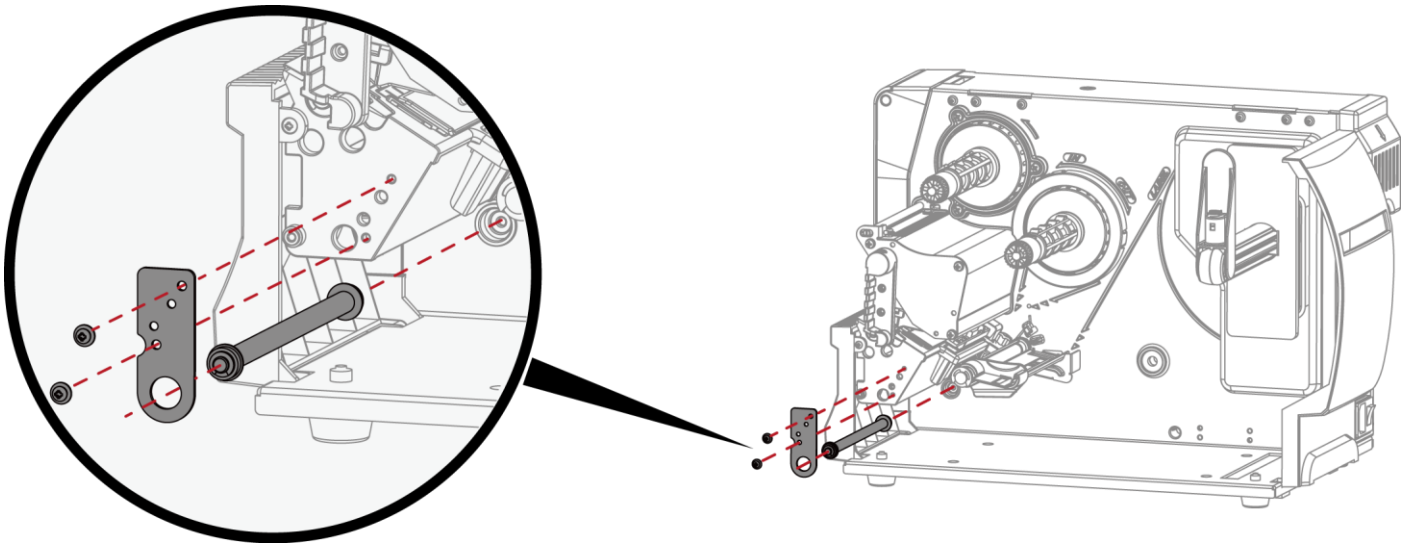

1. Install the rewinder shaft holder bracket and the rewinder bracket shaft.

3

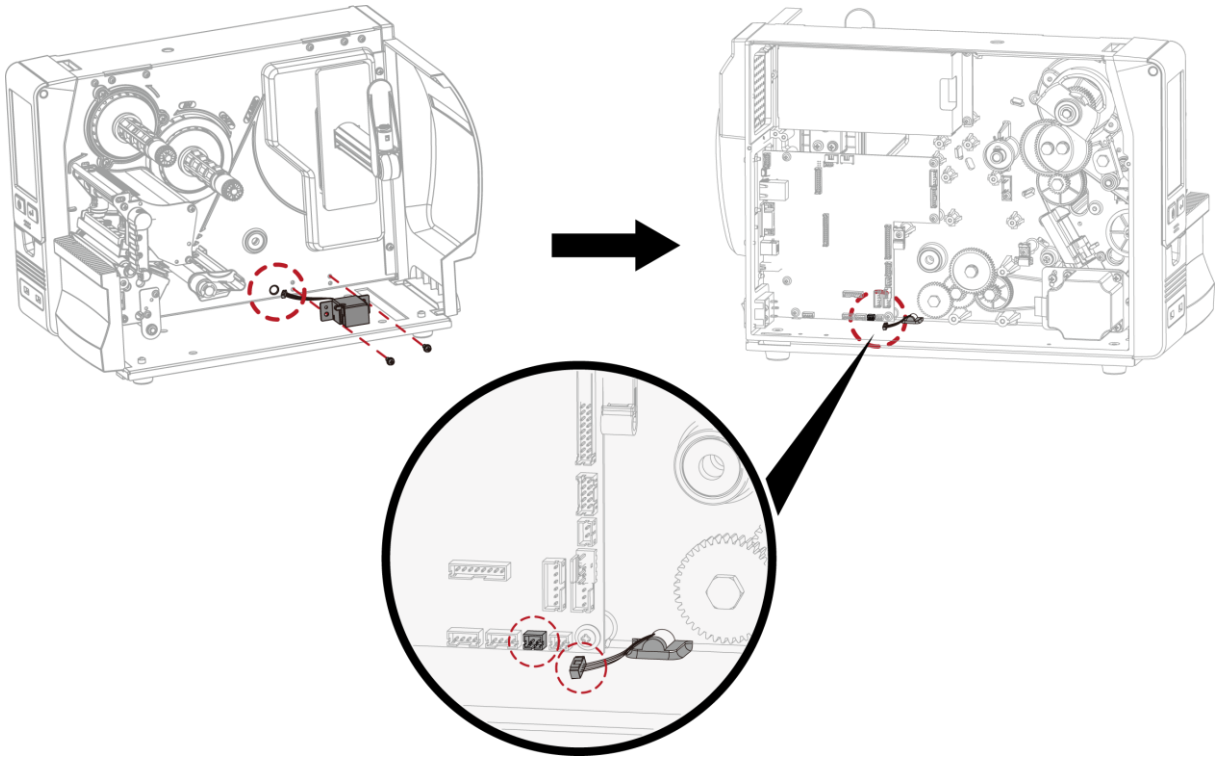

1. Assemble the rewinder full SW ASS'Y.(as shown in the picture)
2. Connect the rewinder full SW ASS'Y cable to the mainboard.(as shown in the picture)

4

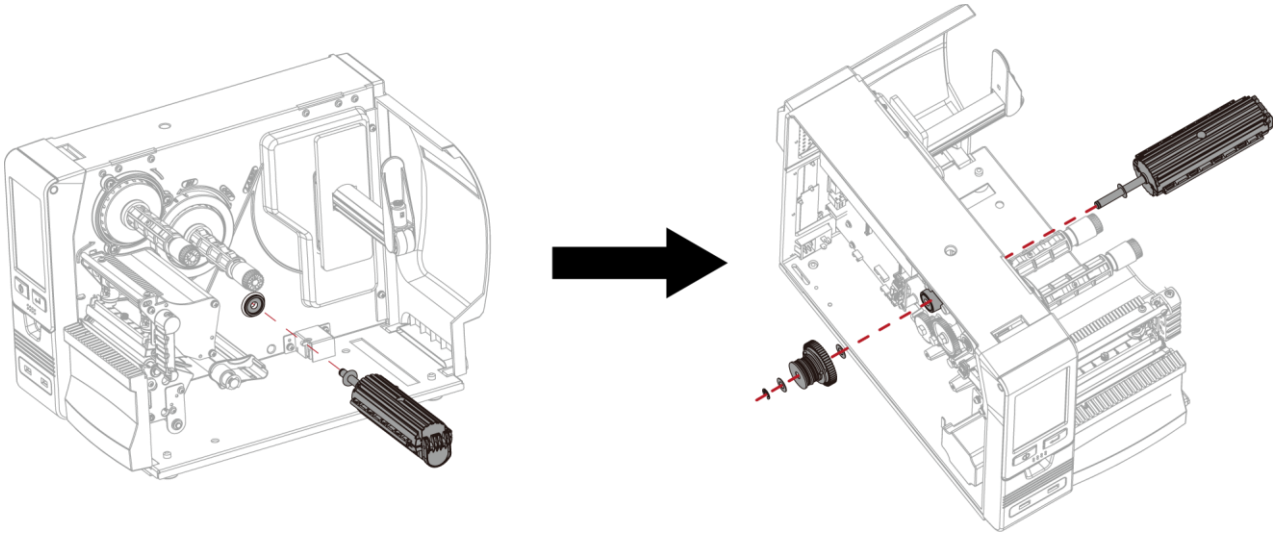

1. Pass the rewinder shaft through the middle plate and connect to the clutch, and fix it with an E-ring.

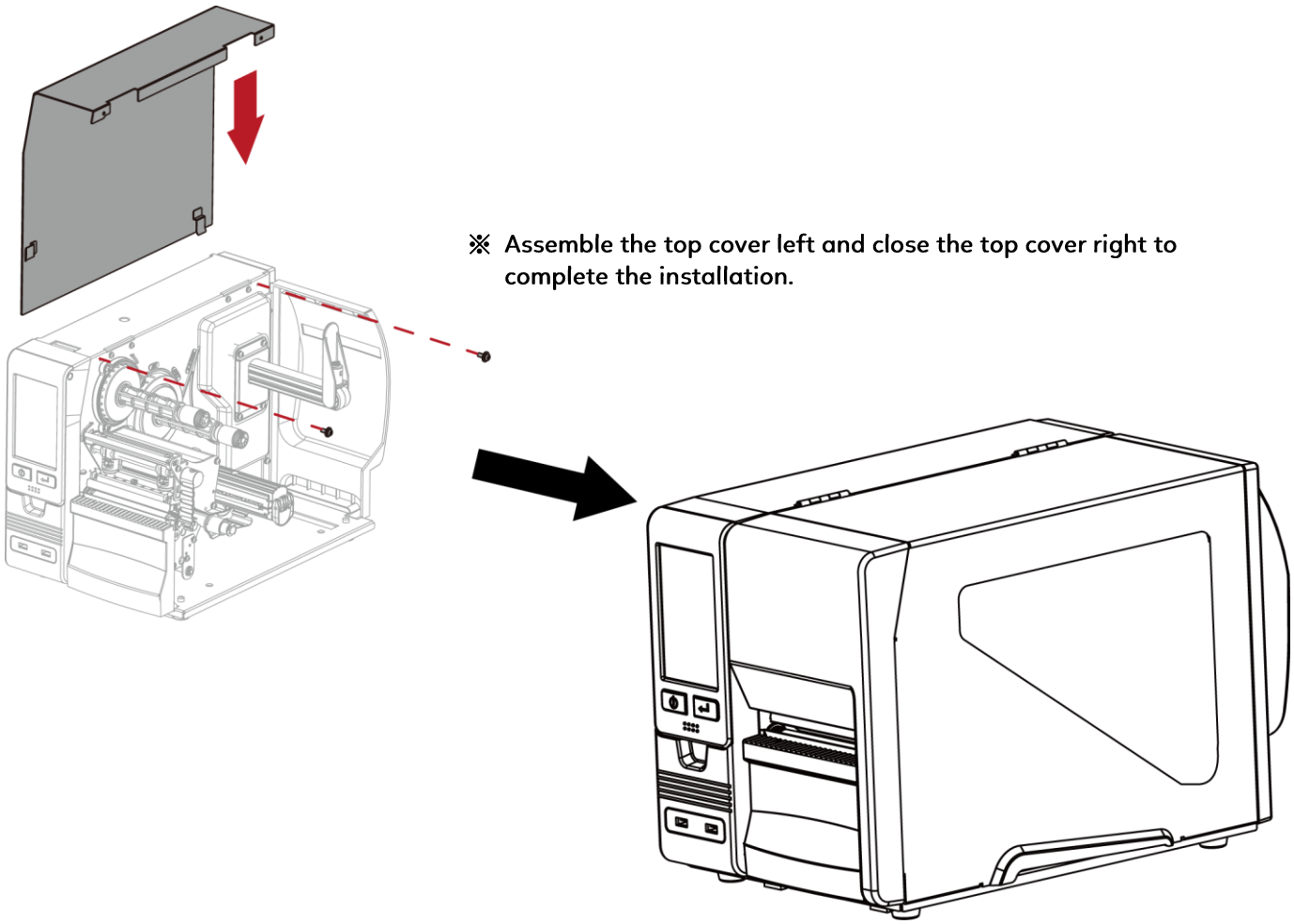

※ Assemble the top cover left and close the top cover right to complete the installation.

* Power off the printer and remove the cable from the electric socket before installing the Internal Rewinder module.
* After the Internal Rewinder module is installed, inside the Printer Setup in GoLabel, please choose 1 (Stripper On) to activate the dispenser function.

5.7 Installing the WiFi/BT Combo Module

Step 1.

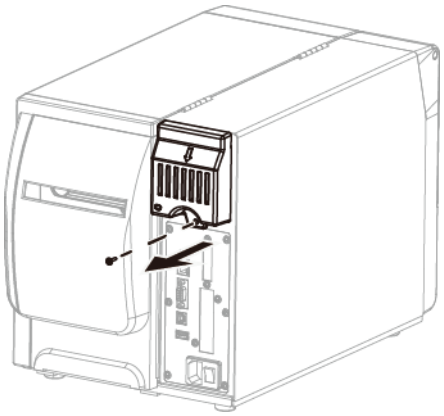

Step 2.

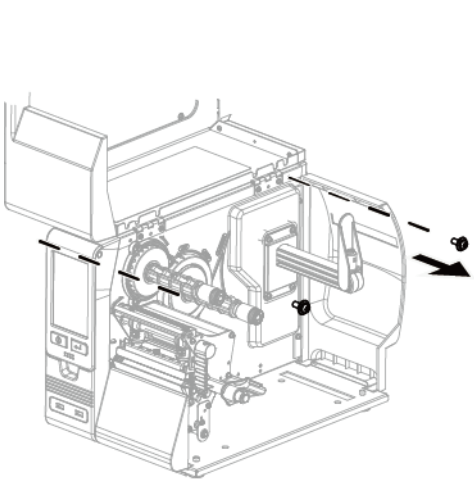

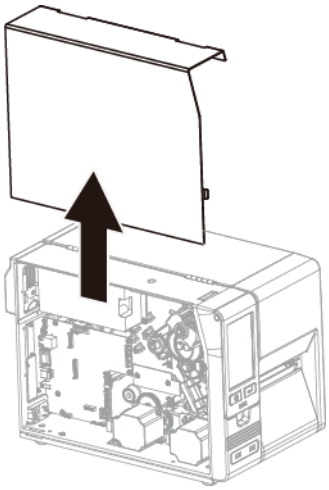

Step 3.

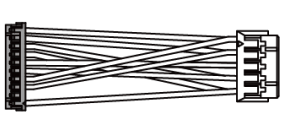

(For Industrial Printers)

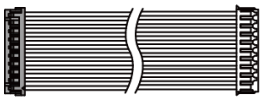

(For Desktop Printers)

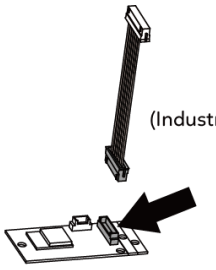

(Industrial Printers)

Step 4.

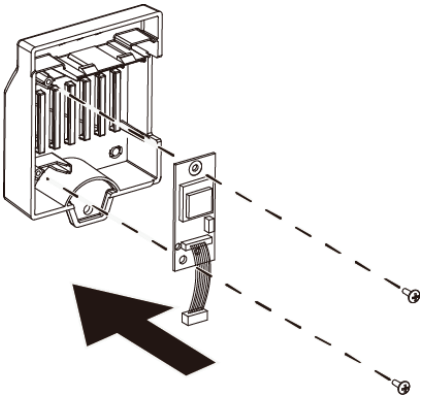

Step 5.

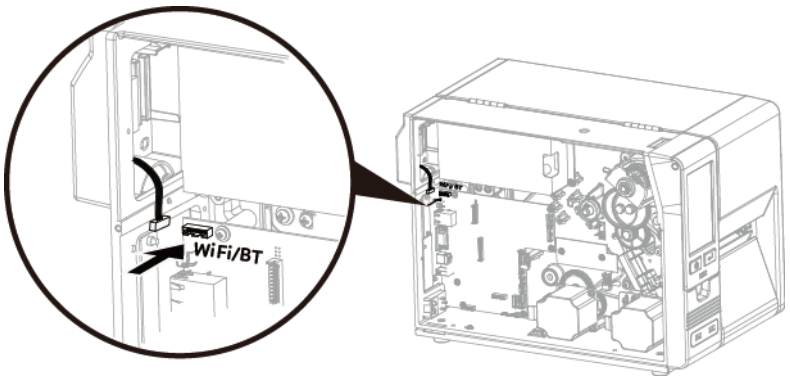

Step 6.

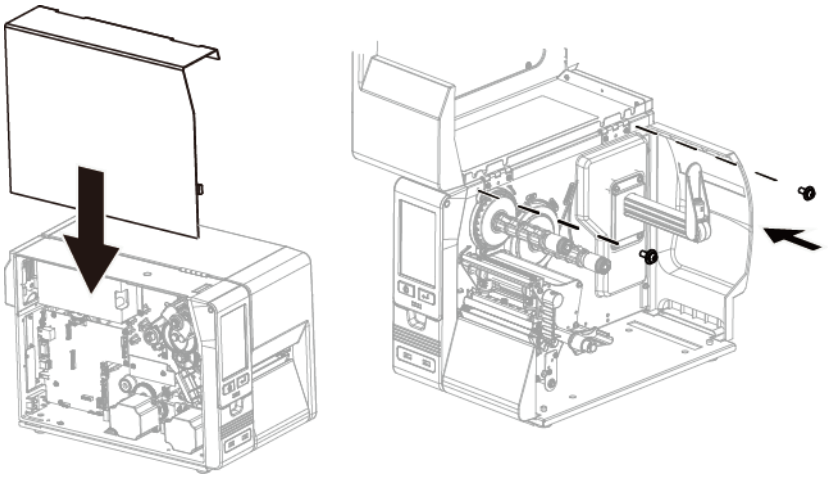

Step 7.

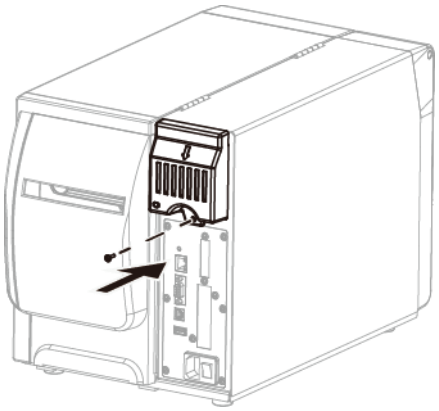

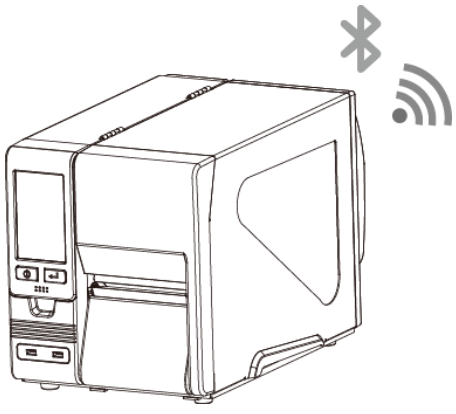

6 Maintenance and Adjustment

6.1 Installing / removing the print head module

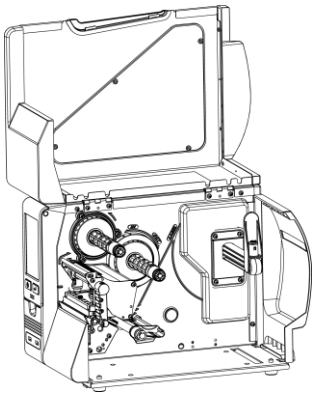

Open the printer cover.

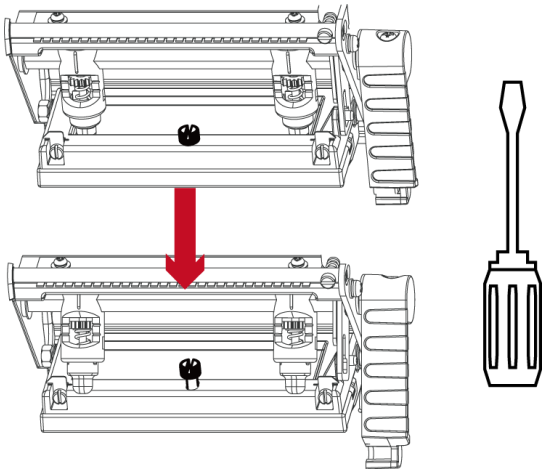

Using a screwdriver loosen the screw to take out the TPH module.

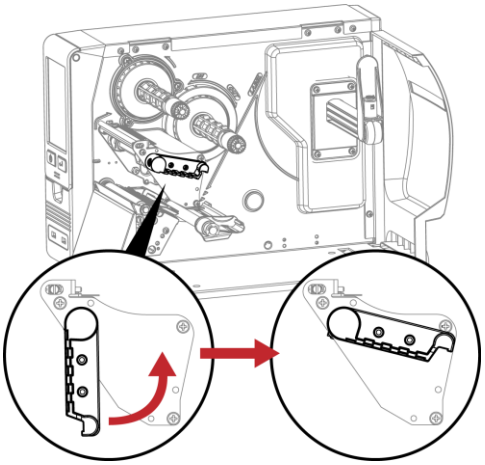

Turn the print head counterclockwise to a top right position.

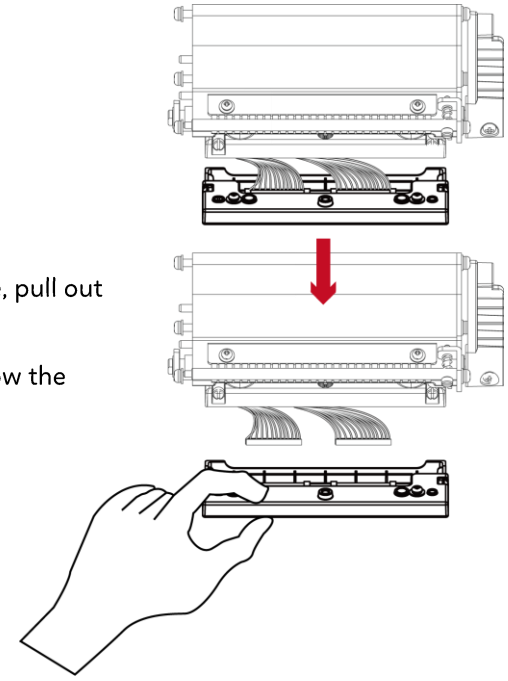

Hold the print head module, pull out the TPH cable smoothly.
To install TPH module, follow the reverse order.

* Remember to switch off the printer before removing the print head module.

6.2 Adjusting the print line

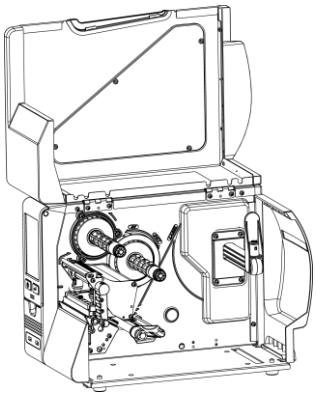

Open the printer cover.

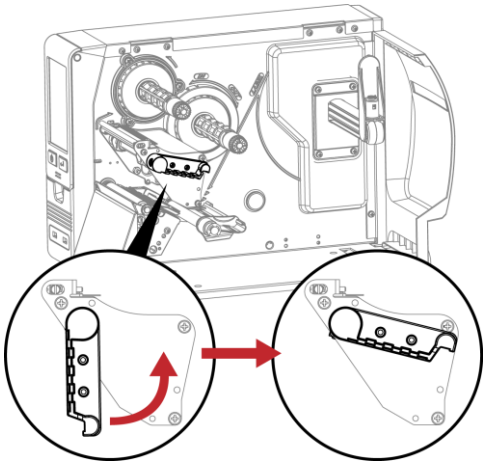

Turn the print head counterclockwise to a top right position.

If no improvement is visible, turn the screws(A) clockwise or counterclockwise as far as possible and be sure to align with the indicator board and indicator line.

Repeat the adjustment process until printing quality has improved.

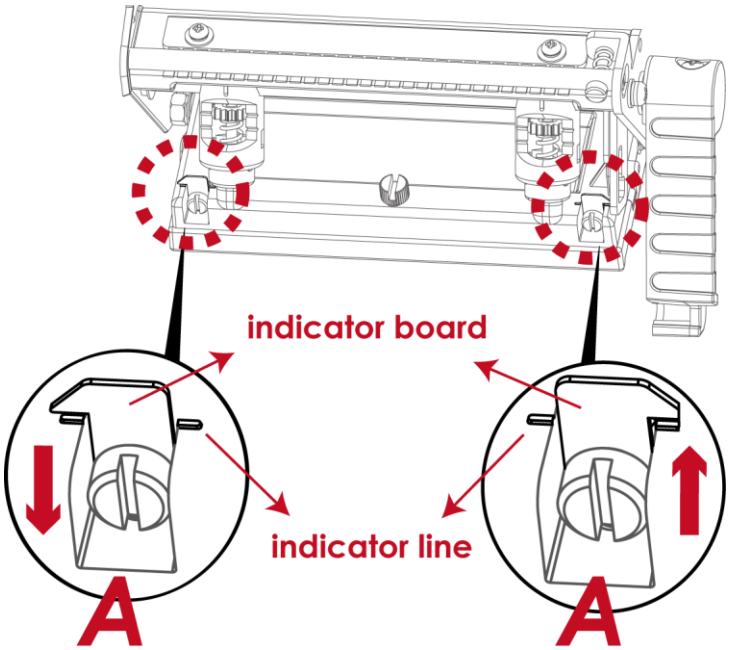

6.3 Adjusting ribbon tension

You can adjust the ribbon tension by turning the ribbon shaft knob (see illustration) clockwise or counterclockwise.

There are 4 possible settings, which is marked on the ribbon supply hub.

1 : Tension is the highest

4 : Tension is the lowest

If the tension is so low that the ribbon does not move forward, you need to reduce the tension of the ribbon supply hub.

To set the tension, press in the knob and turn it clockwise or counterclockwise as required.

Increasing the tension of the ribbon rewind hub will remove any wrinkling of the ribbon during printing, which results from the use of different ribbon materials. (For details about the wrinkling/creasing of ribbons, see Section 6-6.)

If you are using a very narrow ribbon, the printer may not move the label stock forward (particularly with a ribbon that is less than 2" wide). In that case, reduce the tension by turning the knob of the ribbon supply hub counterclockwise.

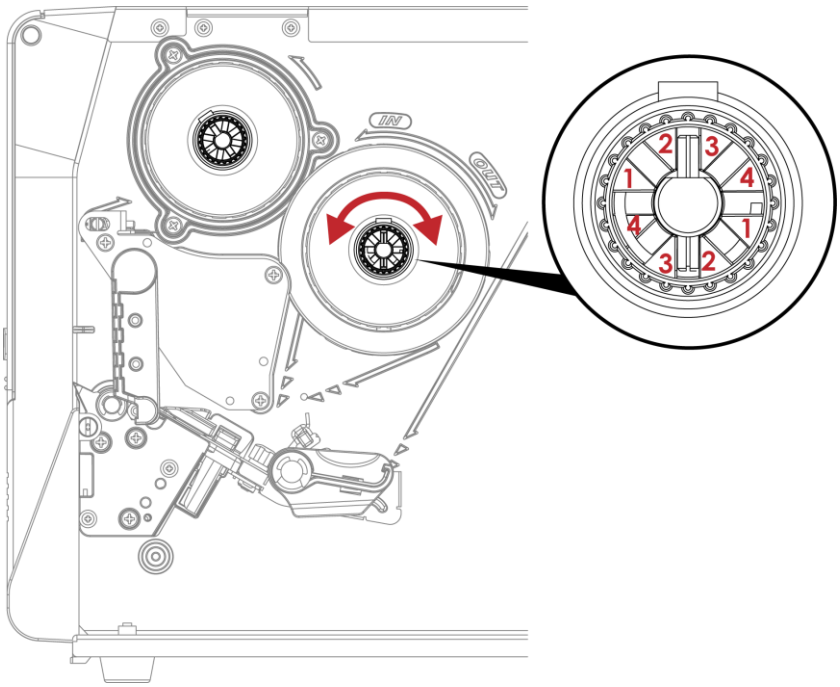

6.4 Cleaning the thermal print head

Dirt on the print head or ribbon may result in inadequate print quality(there are only partial images on the label). The printer cover should therefore be kept closed when possible.

Keeping dirt and dust away from the paper or labels ensures a good print quality and a longer lifespan of the print head.

Here is how you clean the print head:

1. Switch off the printer.
2. Open the printer cover.
3. Remove the ribbon.
4. Release the print head by turning the print head release lever.
5. To remove any label residue or other dirt from the print head
(see Red arrow), please use a soft lint-free cloth dipped in alcohol to wipe.

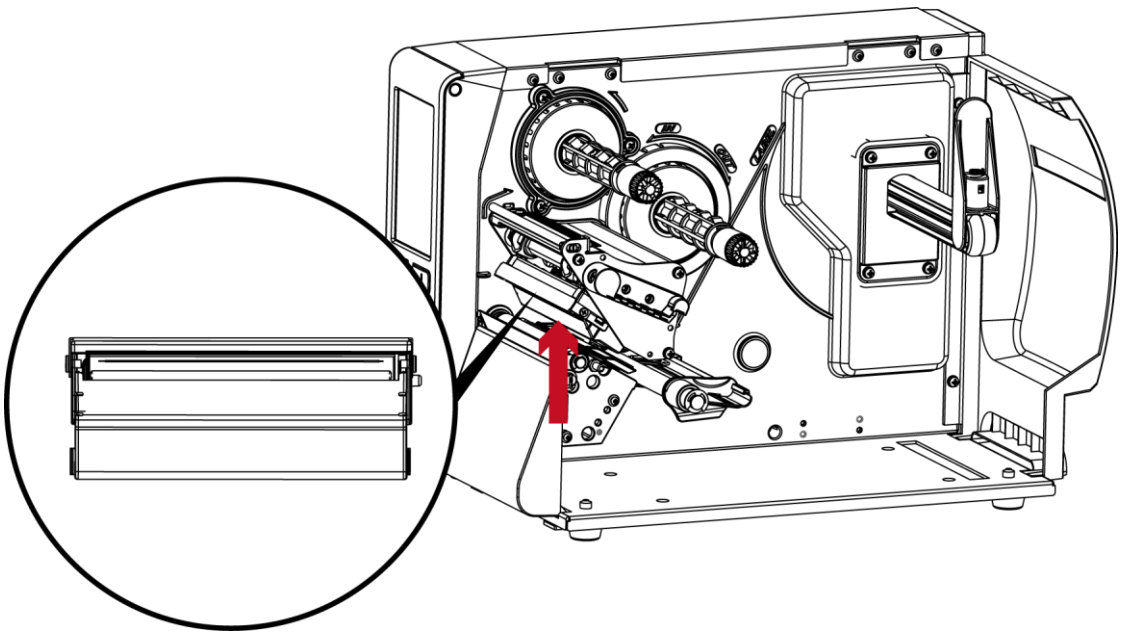

* The print head should be cleaned once a week.

* Please make sure that there are no metal fragments or other hard particles on the soft cloth used to clean the print head.

6.5 Adjusting the balance and print head tension

Open the printer cover.

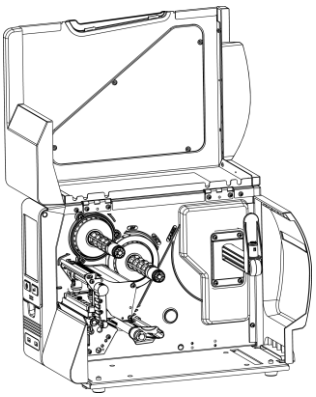

When using a variety of label stock and ribbons, the ink may not be evenly distributed.
If there is no printed image on one side of the paper , or the ribbon wrinkles, the print head pressure must be readjusted using the TPH spring boxes.
Move the TPH spring boxes as shown in the Illustration to change the print head pressure.
The wider the label you are using, the further apart the TPH spring boxes must be moved away from each other. If there is no quality improvement, you need to change the pressure on the TPH spring boxes.

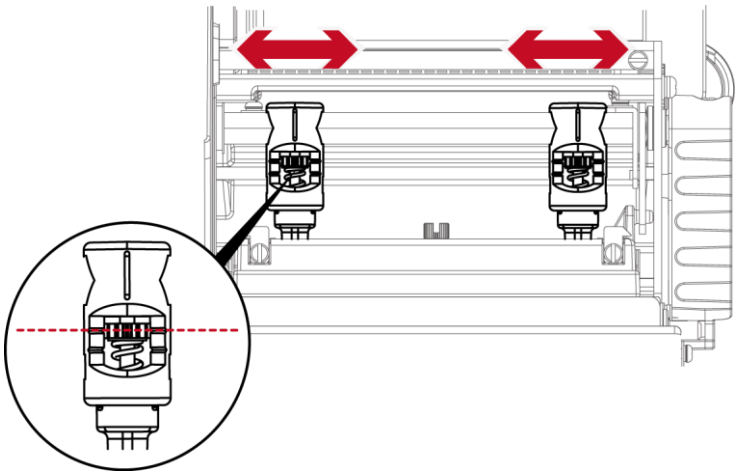

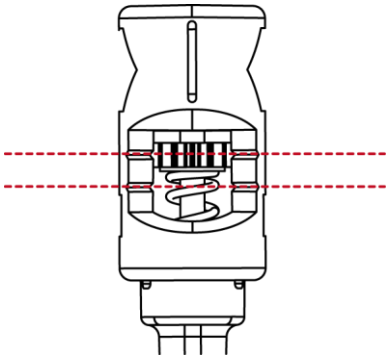

Turning the screw left increases the pressure, while turning it right reduces the pressure.
Be sure not to turn the screw so that it goes below Mark(B).

6.6 Ribbon shield settings

The use of different ribbon materials may cause wrinkling of the ribbon, which in turn affects the print result as illustrated by the examples in (a) and (b). To change the print quality, you can adjust the ribbon shield screws.

If your print result looks like the example in (a), you need to turn ribbon shield screw counterclockwise.

If your print result looks like the example in (b), you need to turn ribbon shield screw clockwise.



To keep track of the change in print quality, you should adjust the screws by half a turn at a time.

Print a test page. If there is no improvement in the print result, turn the screw by another half turn.

Do not turn the adjustment screw more than two full turns(360°).

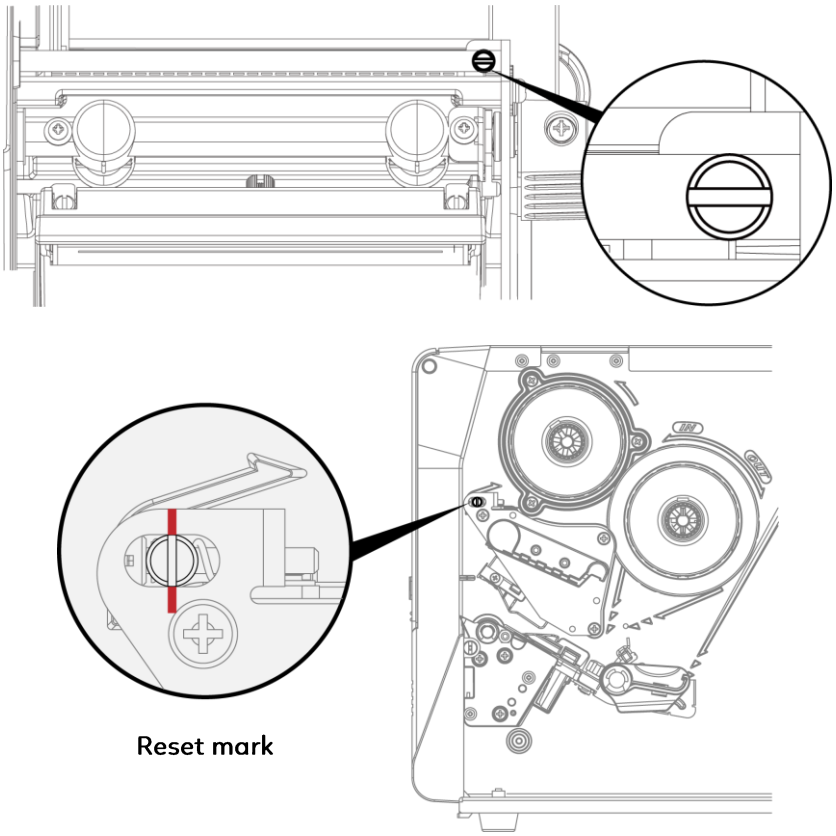

* If you adjust the screw by more than two full turns, the paper feed may no longer function correctly. In that case, unscrew the ribbon shield screws to align the reset mark and restart the adjustment process.

6.7 Cutter Jam

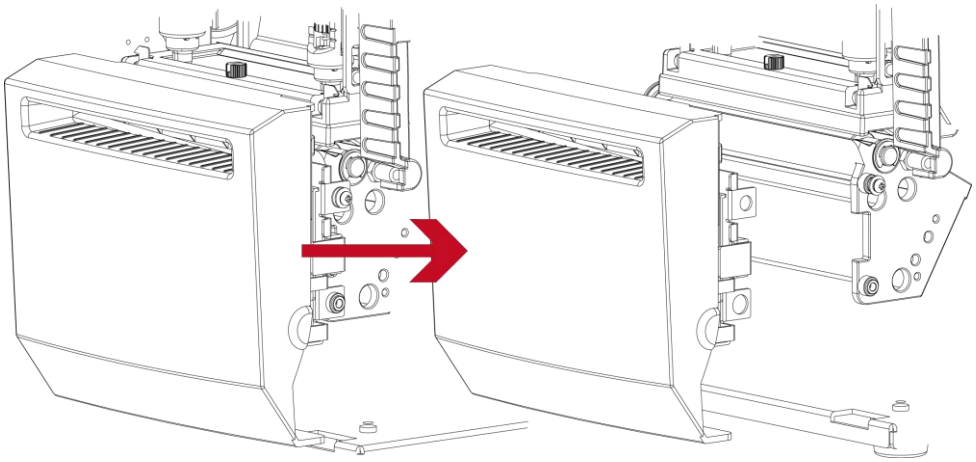

When the paper jam causes the cutter to not work normally, please turn off the power first

(Remove or install cutter refer to ‘’accessories” in Section 5)

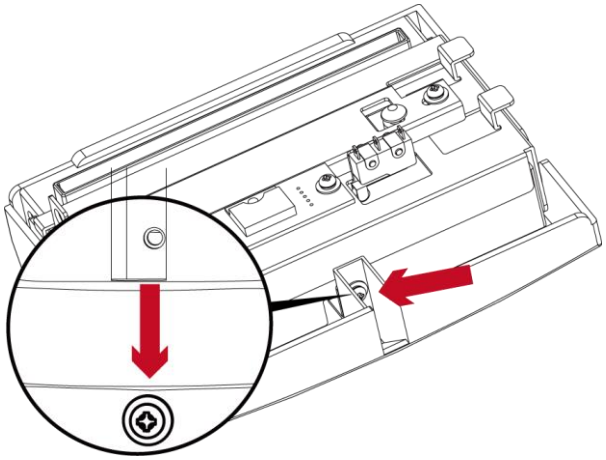

Unscrew the screw at the bottom of cutter.

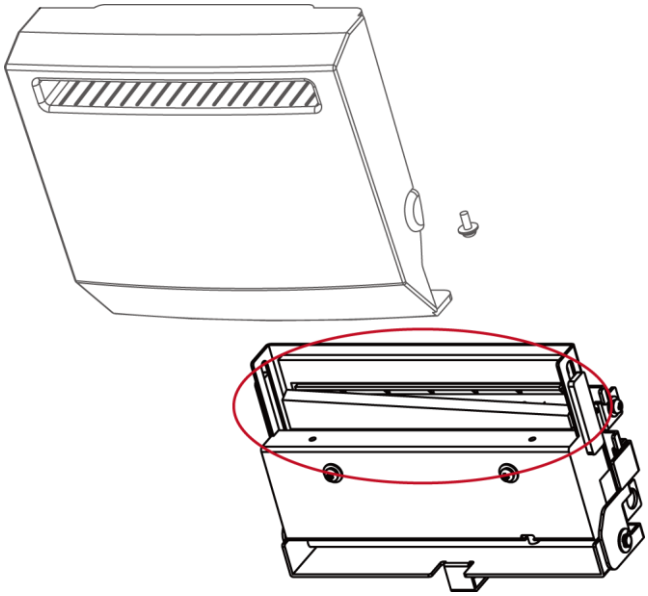

Remove the cutter cover.

Clean and remove jammed paper.

Install the cutter back to the printer.

* Remember to switch off the printer before removing the CUTTER.

* The label medium should be at least 30 mm long to ensure correct functioning of the cutter.

6.8 Troubleshooting

Problem	Solution
The printer is switched on but the LED does not light up.	◆Check the power supply.
The LED lights up red and printing is interrupted.	◆Check the software settings (driver settings) or command codes. ◆Look for the error alert in the table in Section 3.3. Error Alerts. ◆Check whether the print mechanism is closed correctly. Please see the Section 3.3
The label stock passes through the printer but nothing is printed.	◆Please make sure that the label stock is loaded the right side up and that it is the suitable material. ◆Choose the correct printer driver. ◆Choose the correct label stock and a suitable printing mode.
The label stock jams during printing.	◆ Clear the paper jam. Remove any label material left on the thermal print head and clean the print head using a soft lint-free cloth dipped in alcohol. Please see the Section 6.1
There is nothing printed on some parts of a label.	◆ Check whether there is any label material or ribbon stuck to the thermal print head. ◆ Check for errors in the application software. ◆ Check whether the starting position has been set correctly.
There is nothing printed on part of a label or the printing quality is blurred.	◆ Check the thermal print head for dust or other dirt. ◆ Use the internal "~T" command to check whether the thermal print head will carry out a complete print job. ◆ Check the quality of the print medium.
Printing position is incorrect.	◆ Check whether there is paper or dust covering the sensor. ◆ Check whether the label stock is suitable. Contact your supplier. ◆ Check the paper guide settings.
Skipping labels during printing.	◆ Check the label height setting. ◆ Check whether there is dust covering the sensor. ◆ Run the auto-calibration function or press the calibration button. Please see the Section 3.2
The printing quality is blurred.	◆ Check the darkness setting. ◆ Check the thermal print head for dust or dirt. Please see the Section 6.1
The cutter does not cut off the labels in a straight line.	◆ Check whether the label stock is positioned straight.
The cutter does not cut off the labels completely.	◆ Check whether the label is more than 0.2 mm thick.
When using the cutter, the labels are not fed through or cut off incorrectly.	◆ Check whether the cutter has been correctly installed. ◆ Check whether the paper guides are functioning correctly.
The label dispenser is not functioning normally.	◆ Check whether there is dust on the label dispenser. ◆ Check whether the label stock is positioned correctly.



* If any problems occur that are not described above, please contact your dealer.

APPENDIX—SPECIFICATIONS

Model		GX4200i	GX4300i	GX4600i
Print Method		Thermal Transfer / Direct Thermal		
Resolution		203 dpi (8 dot/mm)	300dpi (12 dot/mm)	600dpi (24 dot/mm)
Print Speed		16 ips (406.4 mm/s)	12 ips (304.8 mm/s)	Up to 8 ips (203.2 mm/s)
Print Width		4.09" (104mm)	4.16" (105.7mm)	4.16" (105.6mm)
Print Length		0.12" (3 mm)** to 279.53" (7100 mm)	0.12" (3 mm)** to 125.98" (3200 mm)	0.12" (3 mm)** to 31.50" (800 mm)
Memory	**Flash**	256MB		
	SDRAM	256MB		
	Display	16GB		
Sensor Type		Adjustable reflective sensor and transmissive sensor, left aligned		
Media	**Types**	Continuous form, gap labels, black mark sensing, and punched hole; label length set by auto sensing or programming		
	Width	(Tear): 0.8" (20 mm) Min.; 4.65" (118 mm) Max. (Cutter): 4.61" (117 mm) Max. (Dispenser / Rewind): 4.65" (118 mm) Max.		
	Thickness	0.0024" (0.06 mm) Min.; 0.01" (0.25 mm) Max.		
	Label roll diameter	8" (203.2 mm) Max.		
	Core diameter	1.5"-3" (38.1mm -76.2mm)		
Ribbon	**Type**	Wax, wax/resin, resin		
	Length	1476' (450 m) Max.		
	Width	1.18" (30 mm) Min.; 4.33" (110 mm) Max.		
	Roll diameter:	3" (76.2 mm)		
	Core diameter	1" (25.4 mm)		
Printer Language		EZPL, GEPL, GZPL, GDPL auto switch		
Software	Label design Tool	GoLabel II (for EZPL only)(Windows)		
	Management Tools	GoTools (Windows / Android)		
		GoUtility (Windows)		
	APP	GoAPP (Android / iOS)		
Driver		Windows 7, Windows 8 & 8.1, Windows 10, Windows 11, Windows Server 2008 R2, 2012, 2012 R2, 2016, 2019, 2022, MAC, Linux		
SDK		Win CE, .NET, Windows 7, Windows 8 & 8.1, Windows 10, Windows 11, Android, Mac, iOS		
Resident Fonts	**Bitmap fonts**	6, 8, 10, 12, 14, 18, 24, 30, 16X26 and OCR A & B 90°, 180°, 270° rotatable, single characters 90°, 180°, 270° rotatable 8 times expandable in horizontal and vertical directions		
	TTF Fonts	(Bold / Italic / Underline) 0°, 90°, 180°, 270° rotatable Internal TTF Fonts x 5: Traditional Chinese, Simplified Chinese, Japanese, Korean, Western languages		
Download Fonts	**Bitmap fonts**	90°, 180°, 270° rotatable, single characters 90°, 180°, 270° rotatable		
	Asian fonts	16x16, 24x24. Traditional Chinese (BIG-5), Simplified Chinese(GB2312), Japanese (S-JIS), Korean (KS-X1001) 0°, 90°, 180°, 270° rotatable and 8 times expandable in horizontal and vertical directions 90°, 180°, 270° rotatable and 8 times expandable in horizontal and vertical directions		
	TTF fonts	(Bold / Italic / Underline). 0°, 90°, 180°, 270° rotatable		
Barcodes	1-D Bar codes	China Postal Code, Codabar, Code 11, Code 32, Code 39, Code 93, Code 128 (subset A, B, C), EAN-8/EAN-13 (with 2 & 5 digits extension), EAN 128, FIM, German Post Code, GS1 DataBar, HIBC, Industrial 2 of 5, Interleaved 2-of-5 (I 2 of 5), Interleaved 2-of-5 with Shipping Bearer Bars, ISBT-128, ITF 14, Japanese Postnet, Logmars, MSI, Postnet, Plessey, Planet 11 & 13 digit, RPS 128, Standard 2 of 5, Telepen, Matrix 2 of 5, UPC-A/UPC-E (with 2 or 5 digit extension), UCC/EAN-128 K-Mart, Random Weight and Pharmacode		
	2-D Bar codes	Aztec code, Code 49, Codablock F, Datamatrix code, MaxiCode, Micro PDF417, Micro QR code, PDF417, QR Code, TLC 39, GS1 Composite, DotCode, Marco PDF 417		
Code Pages		Codepage 437, 737, 850, 851, 852, 855, 857, 860, 861, 862, 863, 865, 866, 869 Windows 1250, 1251, 1252, 1253, 1254, 1255, 1257 Unicode UTF8、UTF16BE、UTF16LE		
Graphics		Resident graphic file types are BMP and PCX, other graphic formats are downloadable from the software		
Interface		Serial port: RS-232 (DB-9) USB Device port (B-Type) 3 USB Host ports (A-Type). 2 ports at the front panel, 1 port at the rear panel IEEE 802.3 10/100Base-Tx Ethernet print server (RJ-45)		
Control Panel		Backlight 5" touch screen LCD supports on-board videos 1 Power on/off button with blue color LED backlight 1 Control key: FEED/PAUSE/CANCEL with dual color (green/red) LED backlight 1 Calibration button at rear panel		
Real Time Clock		Standard		
Power		Auto Switching 100-240VAC, 50-60Hz		
Environment	**Operation temperature**	41°F to 104°F (5°C to 40°C)		
	Storage temperature	-4°F to 140°F (-20°C to 60°C)		
Humidity	**Operation**	30-85%, non-condensing.		
	Storage	10-90%, non-condensing.		

Agency Approvals		CE (EMC), FCC Class B, ICES-003, CB, cULus, UKCA, BSMI, CCC, KC **(The safety certification marks may be different depending on sales regions.)**
Dimension	**Length**	460mm
	Width	269mm
	Height	309mm
	Weight	30 lbs (13.6 Kg), excluding consumables
Options		Cutter module (User install) – Rotary cutter, Guillotine cutter, Perforation cutter, High Speed cutter, Thick Paper cutter Label dispenser + Internal rewinder module (Dealer install) BT 2.1 / BT 4.0 WiFi print server module (IEEE 802.11b/g/n) Applicator Interface (DSUB female 15-pin) RFID (UHF) R/W module (project option) External label unwinder / External label rewinder



* Specifications are subject to change without notice. All company and/or product names are trademarks and/or registered trademarks of their respective owners.

* Minimum print height and maximum print speed specification compliance can be dependent on non variables such as label type, thickness, spacing, liner construction, etc. Godex is pleased to test non minimum print height and maximum print speed capability.

* Due to GX4000i Series WiFi module message communication through LAN port, please make sure WiFi module has been removed when you want to use LAN port.

* The cutter is an optional accessory. If the cutter is installed,it is not suitable for children to approach.

APPENDIX—Communication Port Specifications

Pinout Description

- Serial Port

  Default settings：Baud rate 9600, no parity, 8 data bits, 1 stop bit, XON/XOFF protocol and RTS/CTS

RS232 Housing(9-pin to 9-pin)		
DB9 Socket		DB9 Plug
-	1_____1	+5V, max 500mA
RXD	2_____2	TXD
TXD	3_____3	RXD
DTR	4_____4	N/C
GND	5_____5	GND
DSR	6_____6	RTS
RTS	7_____7	CTS
CTS	8_____8	RTS
RI	9_____9	N/C
Computer		Printer

- USB port

Computer Connector : Type A				
Pin No.	1	2	3	4
Function	VBUS	D-	D+	GND

Computer Connector : Type B				
Pin No.	1	2	3	4
Function	VBUS	D-	D+	GND

- Ethernet(RJ-45)

Pin No.	Fuction
1	T+
2	T-
3	R+
4	N/C
5	N/C
6	R-
7	N/C
8	N/C



* The total current to the serial port may not exceed 500mA.

APPENDIX—WiFi quick Setting

Wi-Fi Printer Sever Module Installation(Quick Setting)

Set up wireless network through GoDEX WiFi tool

1. Turn on the printer,connect printer and computer by USB cable.
2. Start GoLabel.
3. “Generic”→”Printer Setup”.

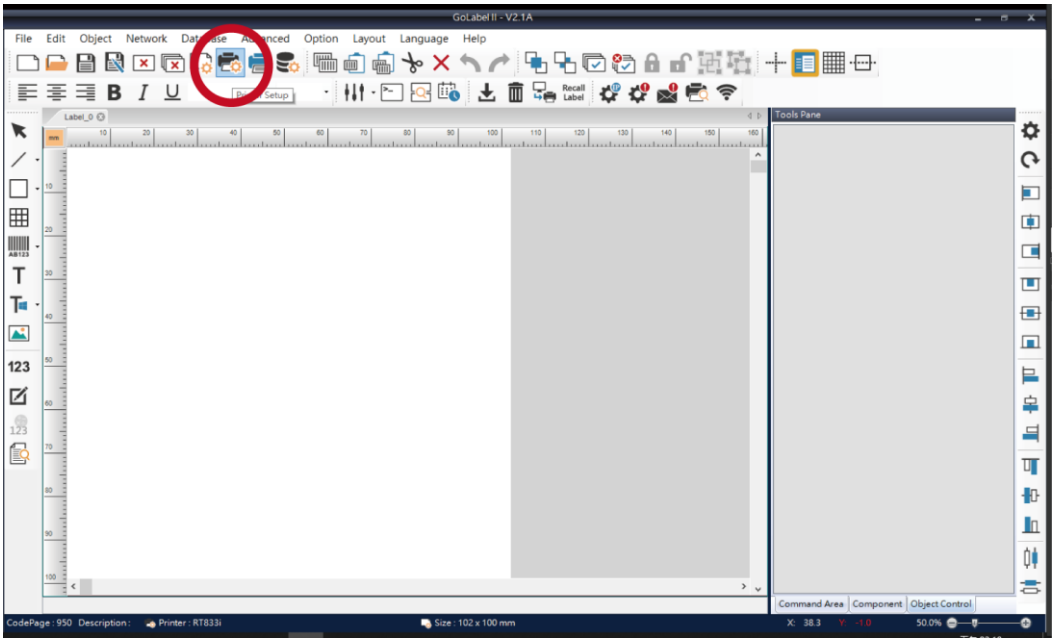

4. Select printer model (Wi-Fi supported models).

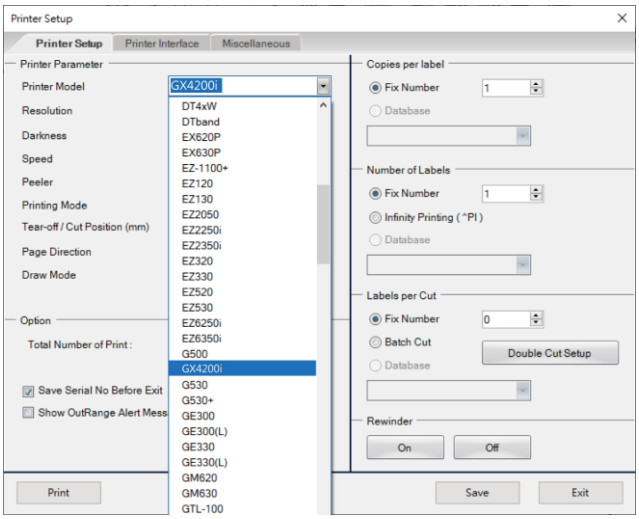

5. Click “WiFi Setting” icon.

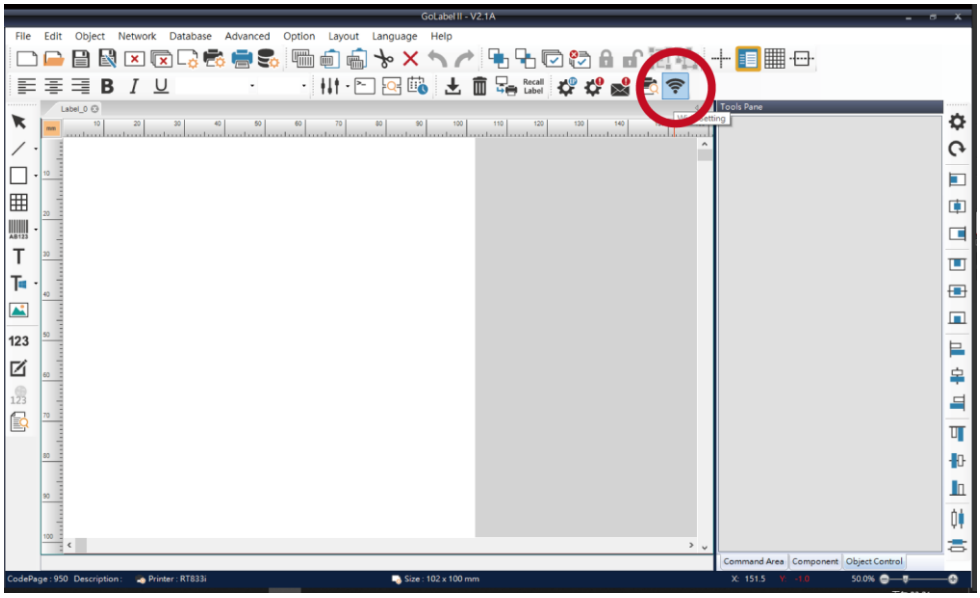

6. Click “Quick Setting” icon.

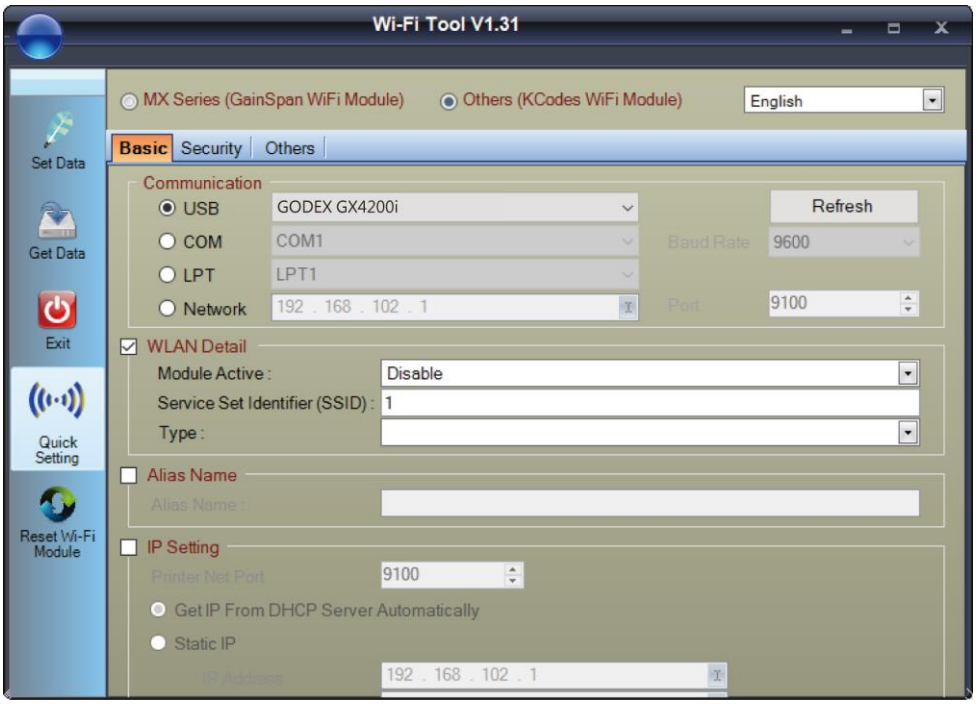

7. Click the Search button.

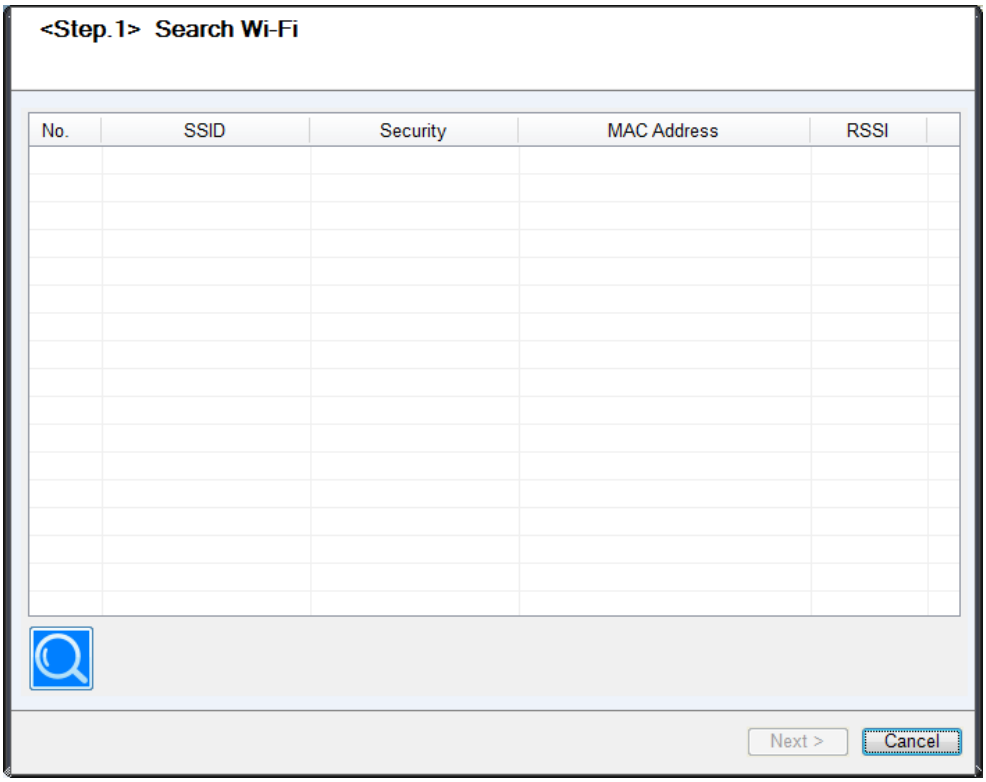

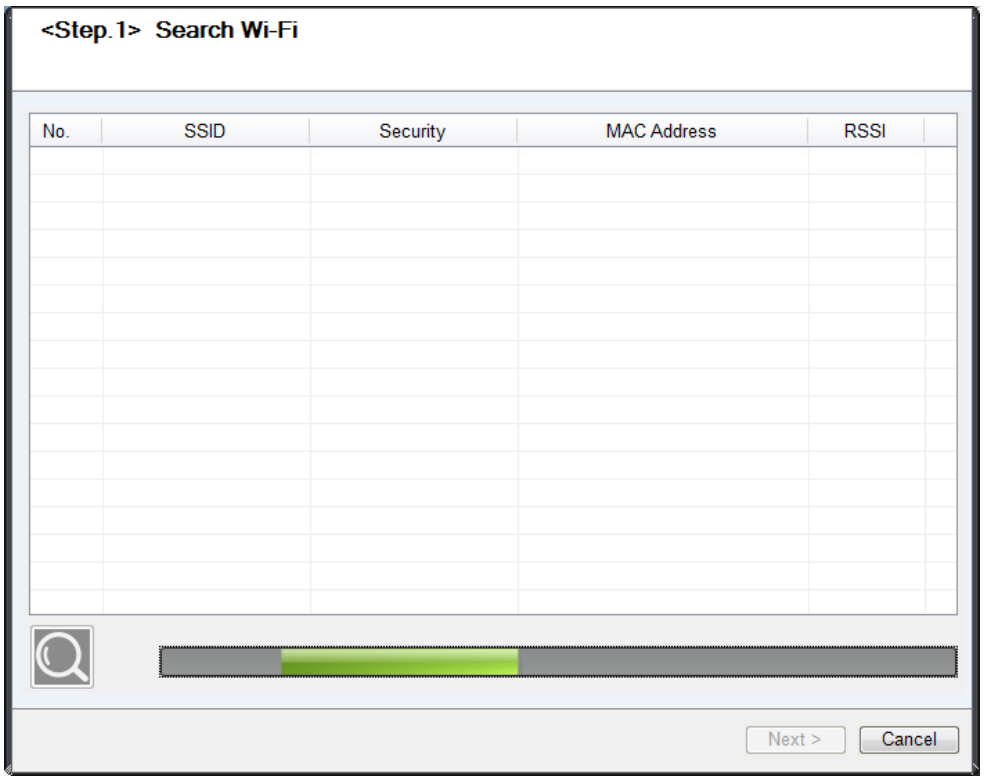

8. Select server and click next button.

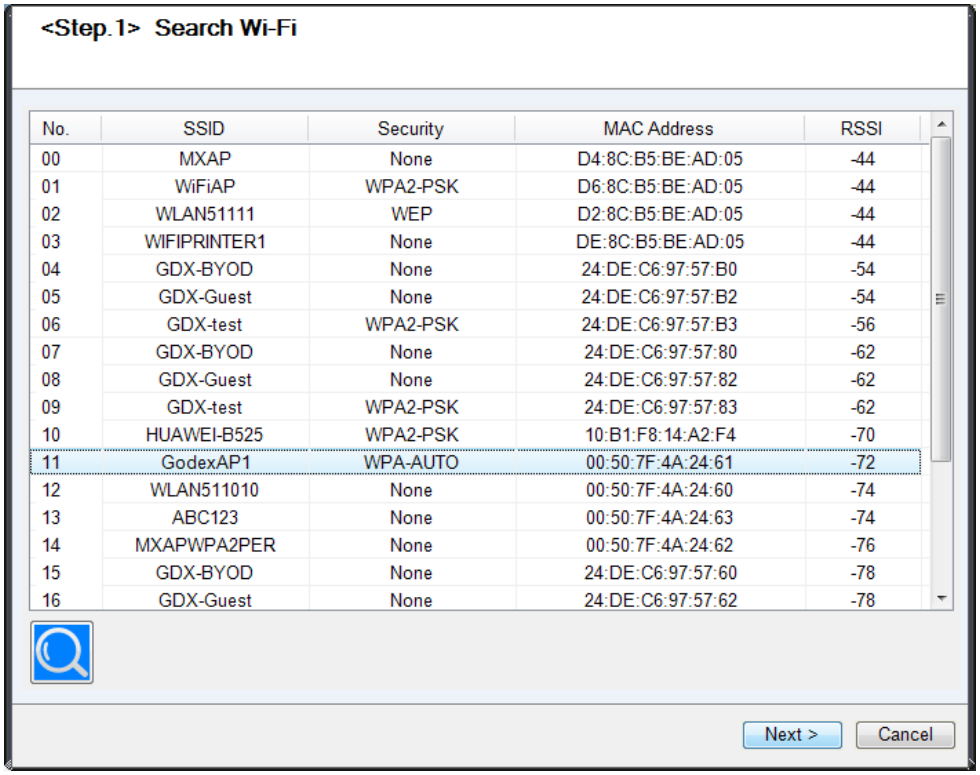

9. Enter the password set on the server side and click the “Setting” button.

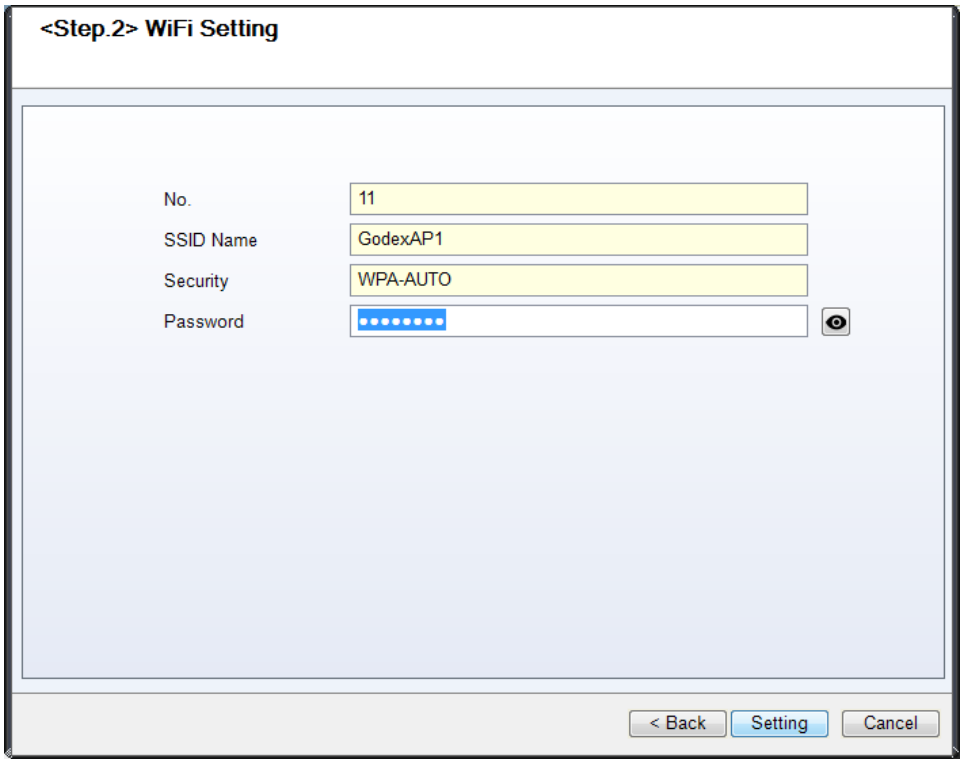

10. After the setting succeeded, a prompt will pop up and the printer will restart.

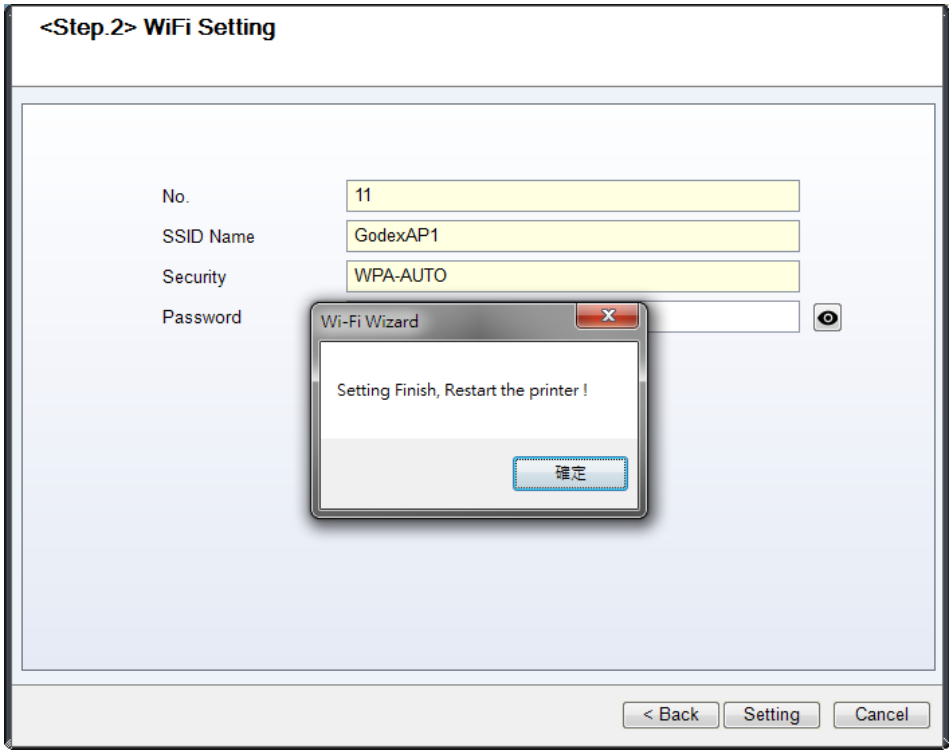

11. Select the "Other" tab and click the "Get Data" icon after selecting "IP Settings".

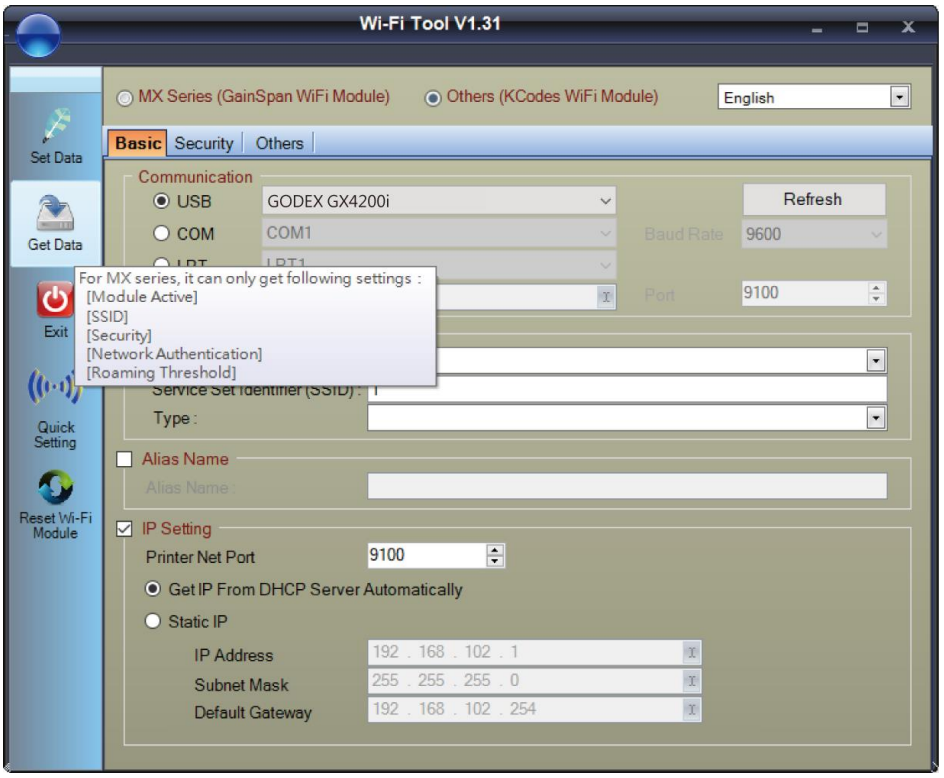

12. After remembering the IP address, open the “Printer Settings” window.

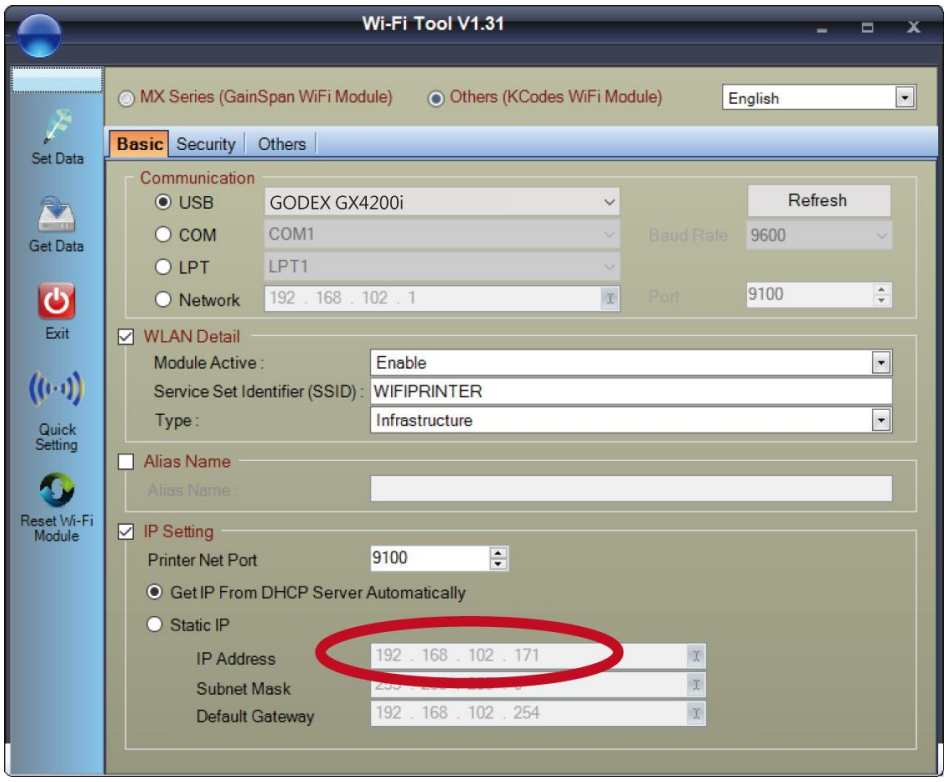

13. Select the “Printer Interface” tab, fill in the IP address and click “Save” to complete the setting.

